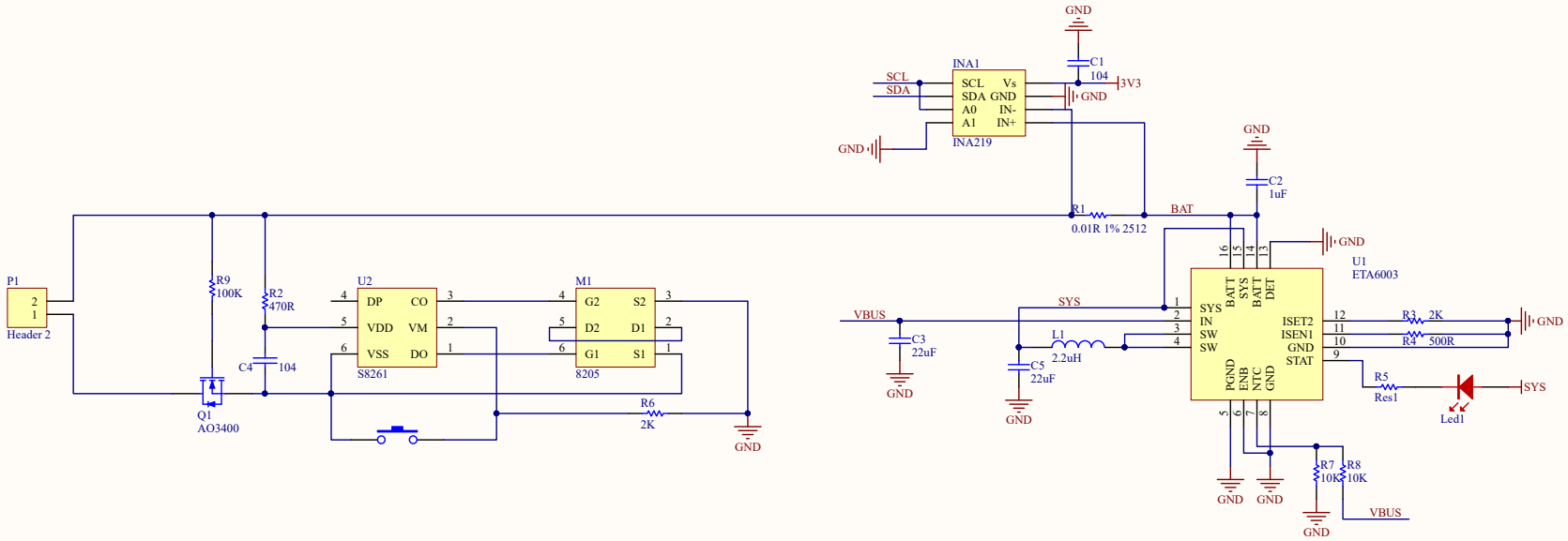

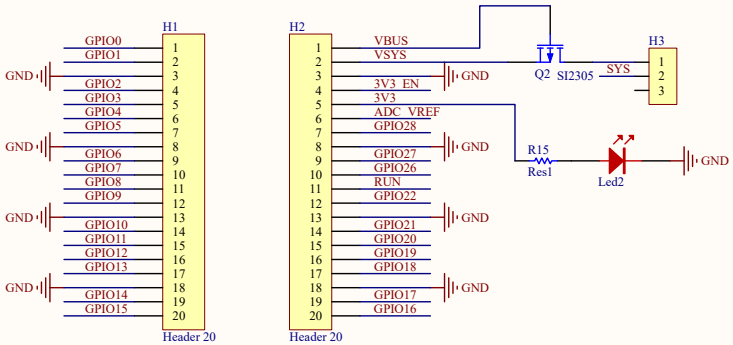

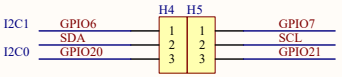

Waveshare

Pico-UPS-B