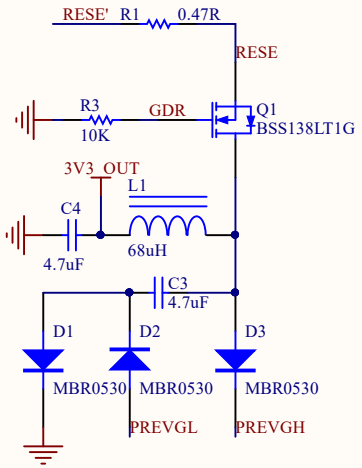

Boost

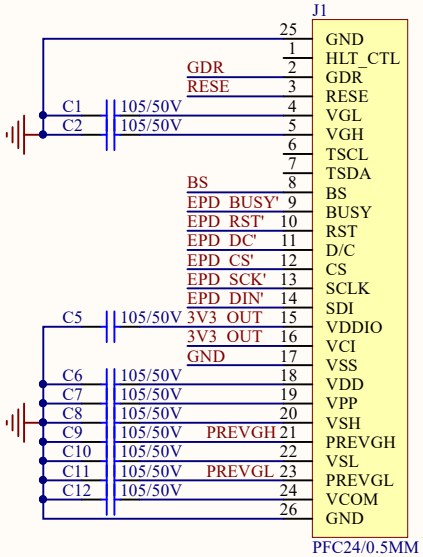

Connector_EPD

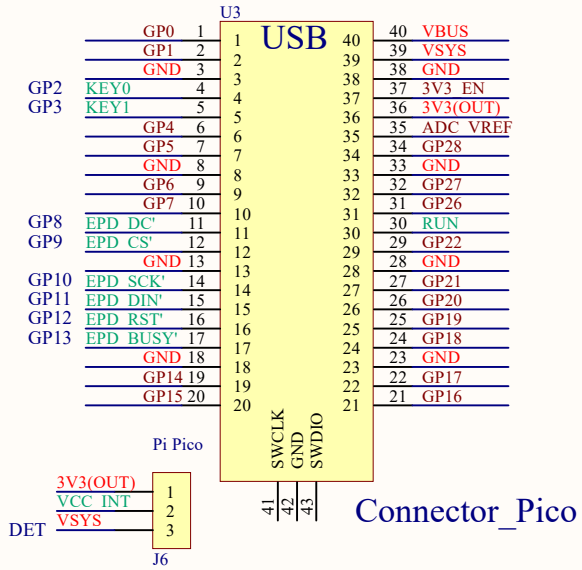

Connector_Pico

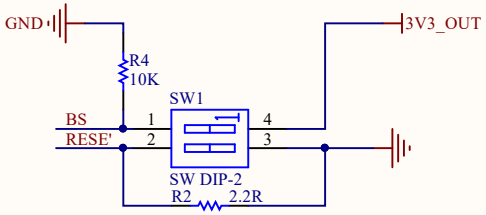

RESE	ON	OFF
Display	0.47Ω	2.67Ω

Waveshare Rev1.0

BS	ON	OFF
Interface	3-line SPI	4-line SPI

Pico-ePaper-Driver-Board

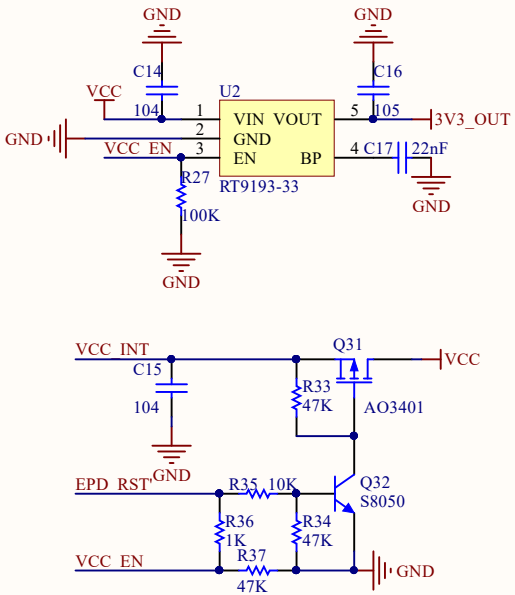

Power_EPD

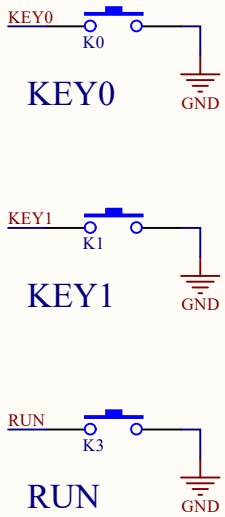

Key

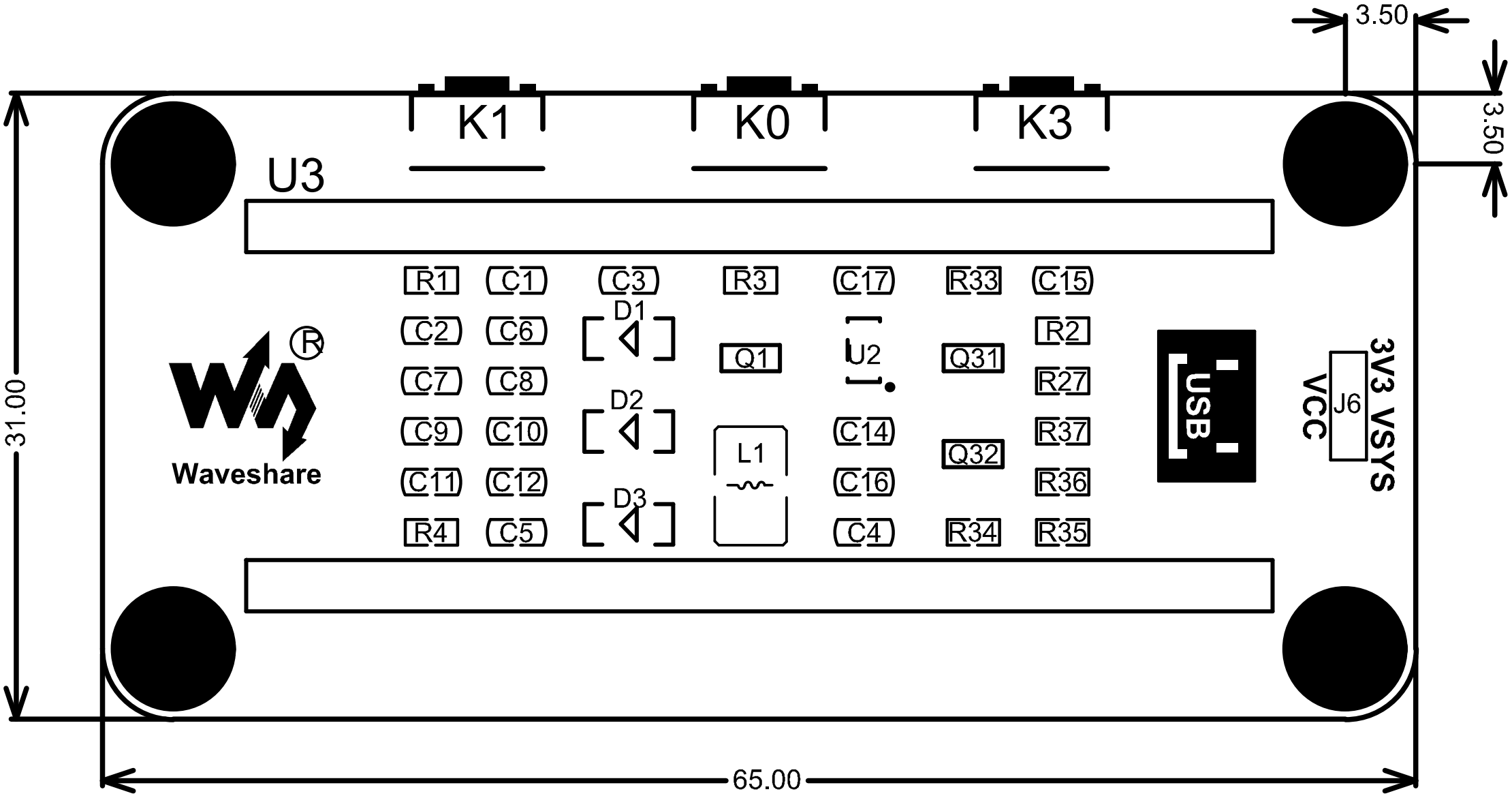
3.50
3.50
K1
K0
K3
U3
R1
C1
C3
R3
C17
R33
C15
C2
C6
D1
R2
C7
C8
Q1
U2
Q31
R27
D2
C9
C10
C14
R37
L1
Q32
C11
C12
C16
R36
D3
R4
C5
C4
R34
R35
Waveshare
USB
J6
3V3 VSYS
VCC
31.00
65.00