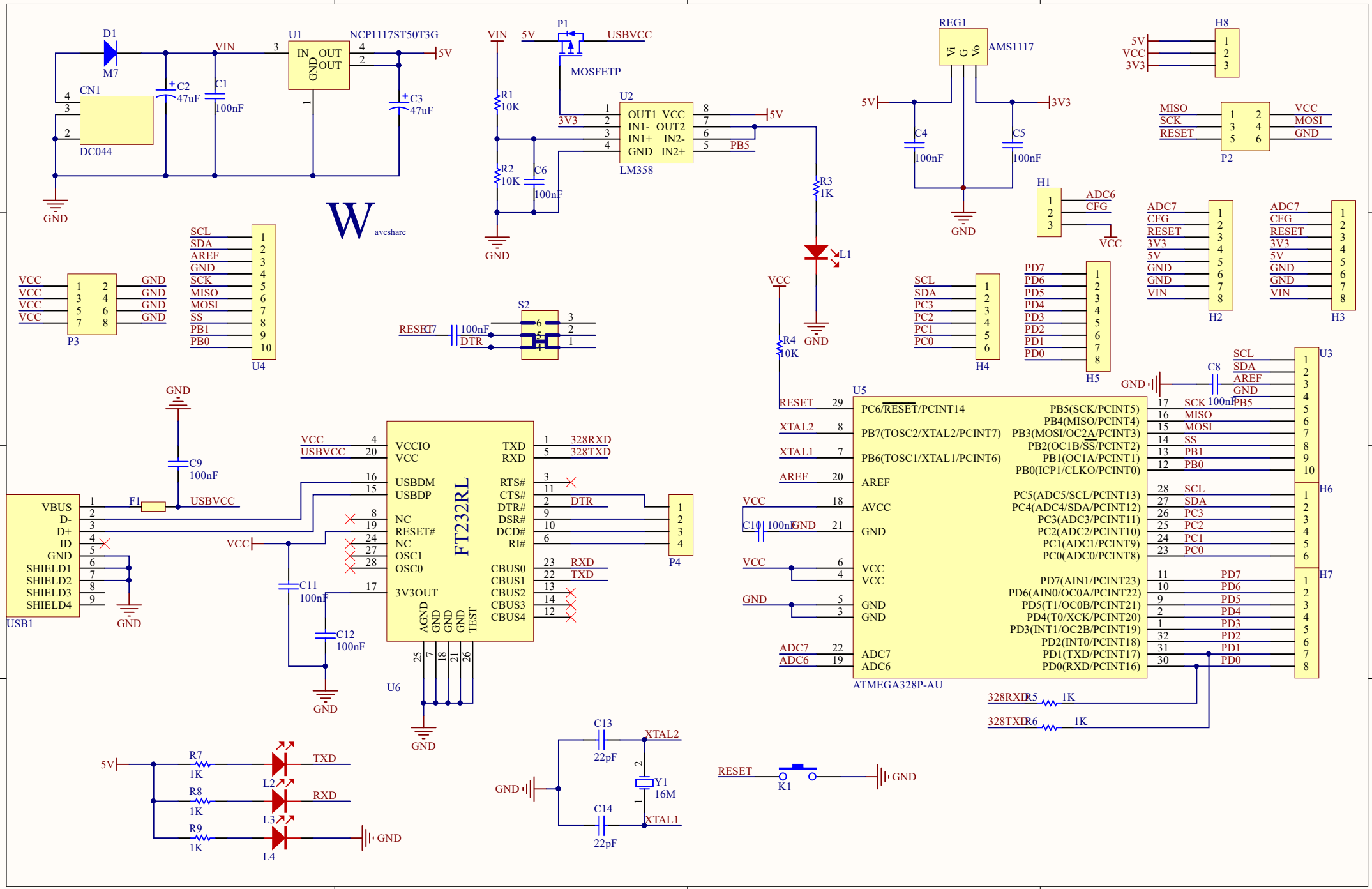
D1
M7
CN1
DC044
C2
47uF
C1
100nF
U1
NCP1117ST50T3G
IN OUT
GND OUT
VIN
5V
C3
47uF
GND
W
aveshare
P1
MOSFETP
USBVCC
R1
10K
R2
10K
C6
100nF
U2
OUT1 VCC
IN1- OUT2
IN1+ IN2-
GND IN2+
LM358
3V3
PB5
R3
1K
L1
REG1
AMS1117
Vi G Vo
C4
100nF
C5
100nF
3V3
H8
VCC
MISO
SCK
RESET
MOSI
P2
H1
ADC6
CFG
H2
ADC7
H3
P3
U4
SCL
SDA
AREF
SS
PB1
PB0
S2
DTR
R4
10K
H4
PC3
PC2
PC1
PC0
H5
PD7
PD6
PD5
PD4
PD3
PD2
PD1
PD0
U3
C8
100nF
PB5
H6
H7
U5
ATMEGA328P-AU
PC6/RESET/PINT14
PB7(TOSC2/XTAL2/PINT7)
PB6(TOSC1/XTAL1/PINT6)
AREF
AVCC
GND
VCC
ADC7
ADC6
PB5(SCK/PINT5)
PB4(MISO/PINT4)
PB3(MOSI/OC2A/PINT3)
PB2(OC1B/SS/PINT2)
PB1(OC1A/PINT1)
PB0(ICP1/CLKO/PINT0)
PC5(ADC5/SCL/PINT13)
PC4(ADC4/SDA/PINT12)
PC3(ADC3/PINT11)
PC2(ADC2/PINT10)
PC1(ADC1/PINT9)
PC0(ADC0/PINT8)
PD7(AIN1/PINT23)
PD6(AIN0/OC0A/PINT22)
PD5(T1/OC0B/PINT21)
PD4(T0/XCK/PINT20)
PD3(INT1/OC2B/PINT19)
PD2(INT0/PINT18)
PD1(TXD/PINT17)
PD0(RXD/PINT16)
XTAL2
XTAL1
RESET
C9
100nF
USBVCC
F1
USB1
VBUS
D-
D+
ID
SHIELD1
SHIELD2
SHIELD3
SHIELD4
C11
100nF
C12
100nF
U6
FT232RL
VCCIO
USBDM
USBDP
NC
RESET#
OSC1
OSC0
3V3OUT
TXD
RXD
RTS#
CTS#
DTR#
DSR#
DCD#
RI#
CBUS0
CBUS1
CBUS2
CBUS3
CBUS4
AGND
TEST
328RXD
328TXD
P4
R5
1K
R6
1K
R7
1K
R8
1K
R9
1K
L2
L3
L4
C13
22pF
C14
22pF
Y1
16M
K1