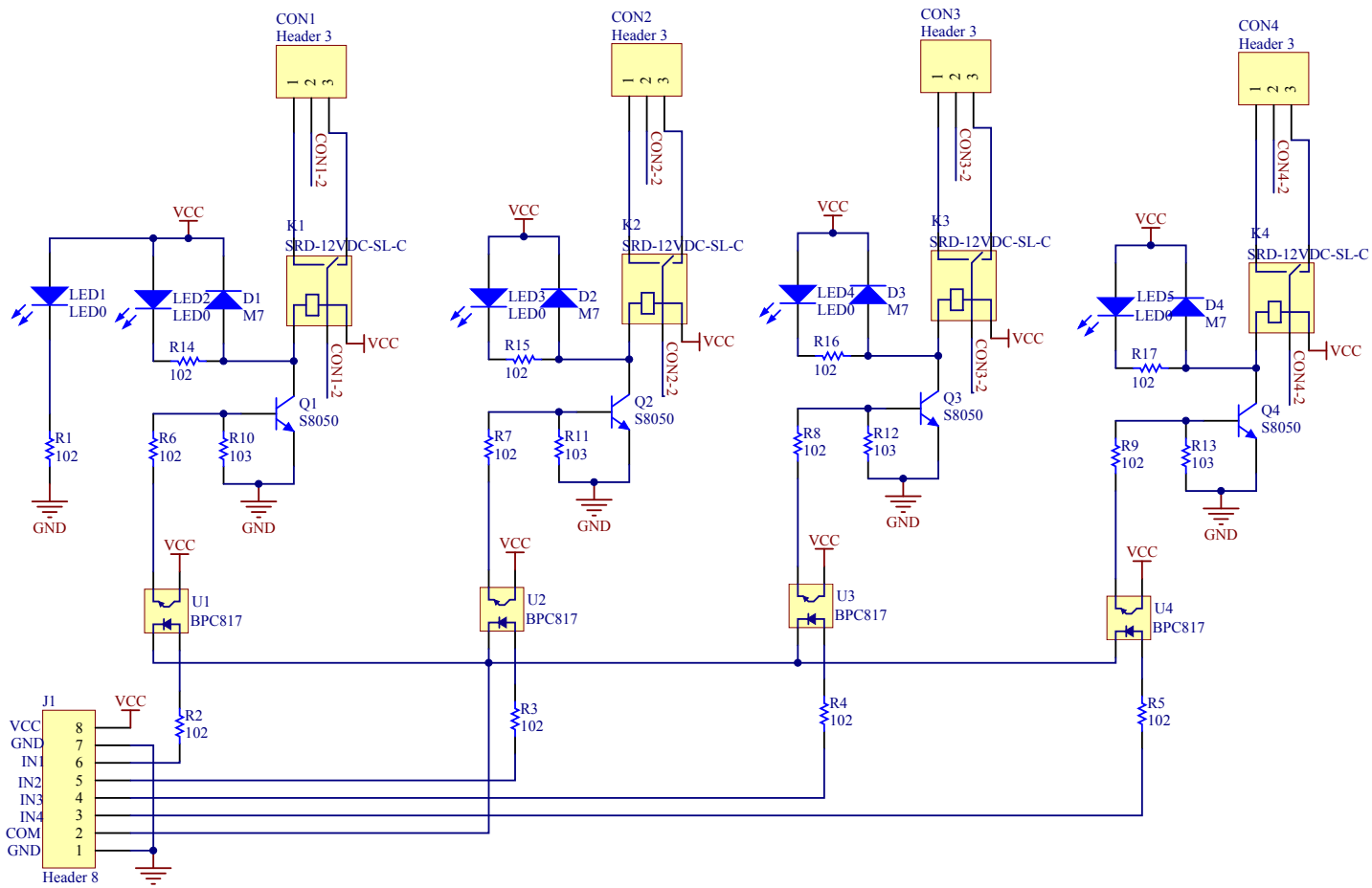
CON1
Header 3
CON2
Header 3
CON3
Header 3
CON4
Header 3
CON1-2
CON2-2
CON3-2
CON4-2
K1
SRD-12VDC-SL-C
K2
SRD-12VDC-SL-C
K3
SRD-12VDC-SL-C
K4
SRD-12VDC-SL-C
VCC
LED1
LED0
LED2
LED0
D1
M7
LED3
LED0
D2
M7
LED4
LED0
D3
M7
LED5
LED0
D4
M7
R14
102
R15
102
R16
102
R17
102
Q1
S8050
Q2
S8050
Q3
S8050
Q4
S8050
R1
102
R6
102
R10
103
R7
102
R11
103
R8
102
R12
103
R9
102
R13
103
GND
U1
BPC817
U2
BPC817
U3
BPC817
U4
BPC817
R2
102
R3
102
R4
102
R5
102
J1
VCC
GND
IN1
IN2
IN3
IN4
COM
GND
Header 8