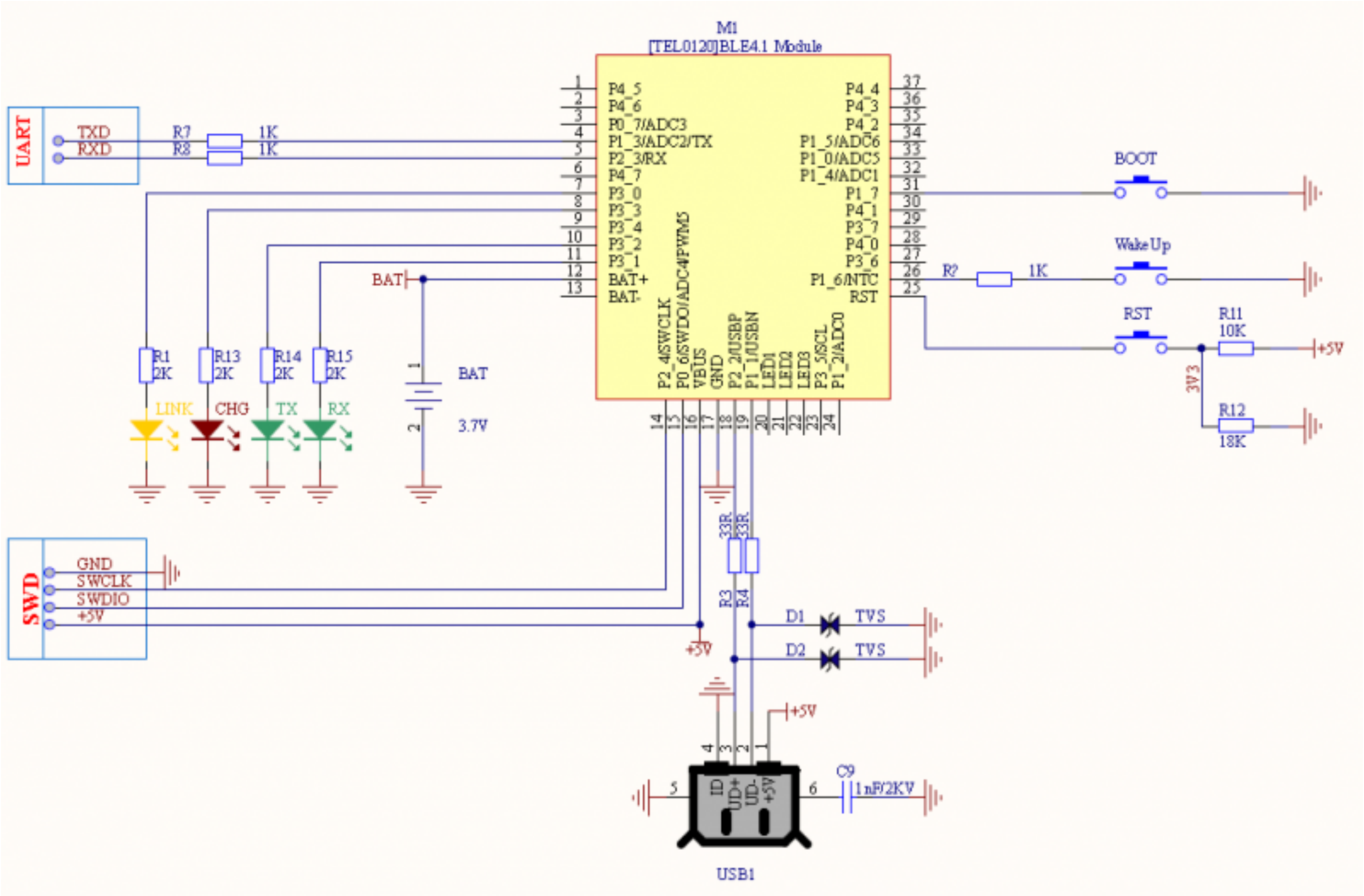
M1
[TEL0120]BLE4.1 Module
UART
TXD
RXD
R7
R8
1K
1K
P4_5
P4_6
P0_7/ADC3
P1_3/ADC2/TX
P2_3/RX
P4_7
P3_0
P3_3
P3_4
P3_2
P3_1
BAT+
BAT-
P4_4
P4_3
P4_2
P1_5/ADC6
P1_0/ADC5
P1_4/ADC1
P1_7
P4_1
P3_7
P4_0
P3_6
P1_6/NTC
RST
P2_4/SWCLK
P0_6/SWDO/ADC4/PWM5
VBUS
GND
P2_2/USBP
P1_1/USBN
LED1
LED2
LED3
P3_5/SCL
P1_2/ADC0
BOOT
WakeUp
R?
1K
RST
R11
10K
+5V
3V3
R12
18K
BAT
BAT
3.7V
R1
2K
R13
2K
R14
2K
R15
2K
LINK
CHG
TX
RX
SWD
GND
SWCLK
SWDIO
+5V
33R
33R
R3
R4
D1
TVS
D2
TVS
+5V
+5V
ID
UD+
UD-
+5V
C9
1nF/2KV
USB1