B2 Battery and Charger

User Manual V1.0

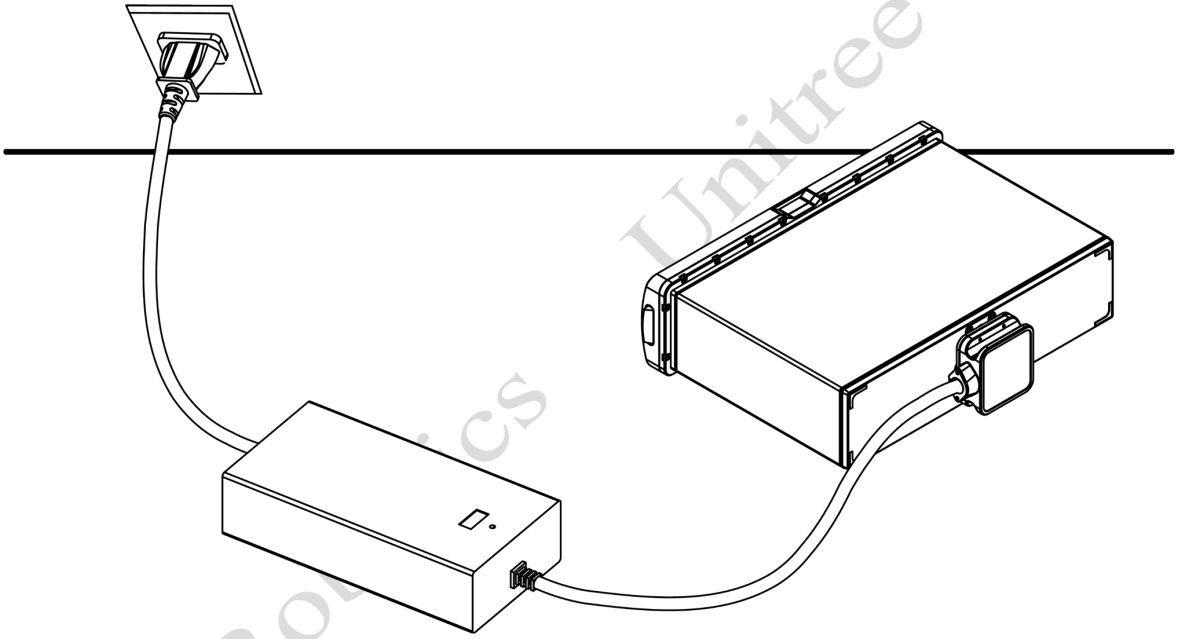

Unitree

This product is a civilian robot. We kindly request that all users refrain from making any dangerous modifications or using the robot in a hazardous manner.

Please visit Unitree Robotics Website for more related terms and policies, and comply with local laws and regulations.

Unitree Robotics

Battery

Introduction

The battery is designed specifically for the B2 quadruped robot, equipped with a charging and discharging management function. It adopts high-performance battery cells and utilizes an advanced Battery Management System (BMS) developed independently by Unitree Robotics to provide powerful electrical power for the B2 quadruped robot.

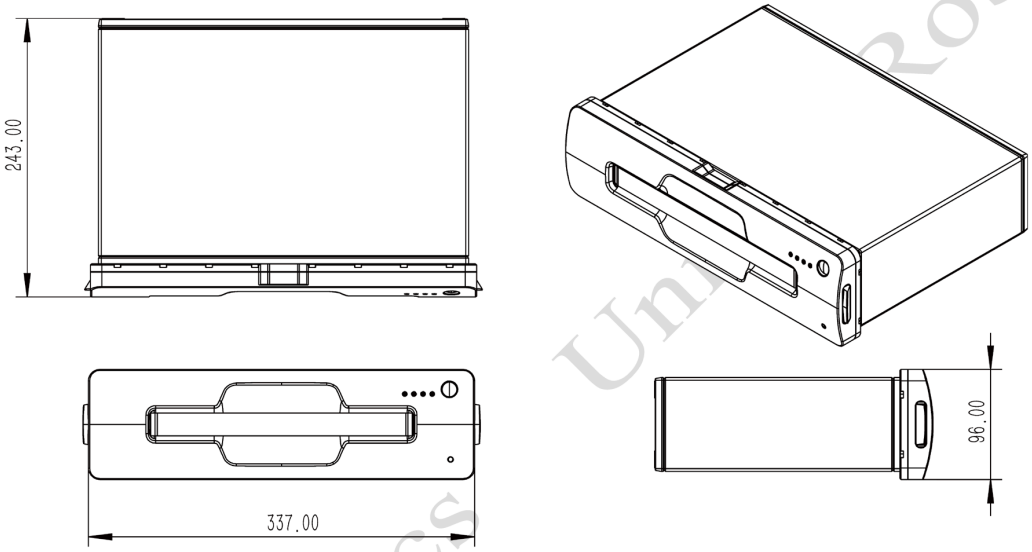

⚠ Before using the battery for the first time, make sure that the battery are fully charged before using at the first time!

Unitree Robotics

Parts Name

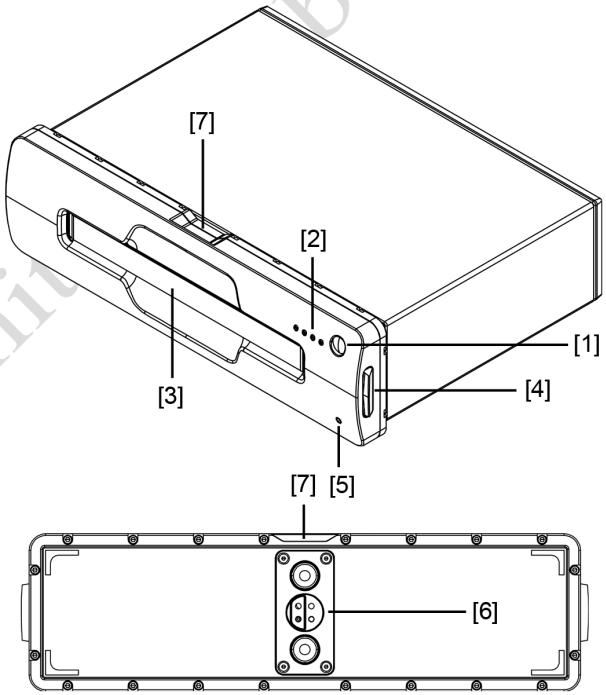

[1] Power Switch
[2] LED Light
[3] carry handle
[4] Fastener
[5] pressure relief valve orifice
[6] Charger Interface
[7] Foolproof Interface

Technical Specifications

Battery		
Parameter	**Specifications**	**Remarks**
Size	337mm*243mm*96mm	
Rated Voltage	DC 50.4V	
Limited Charge Voltage	DC 58.5V	
Rated Capacity	45000mA，2268Wh	
Run Times	4-6h	

© 2023 All rights reserved, Unitree Robotics

Battery Function

1) **Power display:** The battery has its own power indicator, which can display the current battery power.

2) **Balance charging protection:** Automatically balance the voltage of the internal cells of the battery to protect the battery.

3) **Overcharge protection:** Overcharging will seriously damage the battery, and it will automatically stop charging when the battery is fully charged.

4) **Charging temperature protection:** Charging will damage the battery when the battery temperature is below 0°C or above 50°C, and the battery will lead to abnormal charging.

5) **Charging electric current protection:** High electric current charging will seriously damage the battery. When the charging current is more than 20A, the battery will stop charging.

6) **Over-discharge protection:** Over-discharge can seriously damage the battery. When the battery discharges to 39V, the battery will cut off the output. When the cell voltage is lower than 35V, the recharge will first use the pre-charge function, with a current of approximately 300mA, until the voltage is restored to 42V, which requires a longer waiting time.

7) **Short circuit protection:** In the event of a short circuit detected by the battery, the output will be cut off to protect the battery. At the same time, the battery will use an indicator light to indicate a malfunction.

8) **Battery load detection protection:** When the battery is not inserted into the robot, it will not be able to power on. When a powered-on battery is removed from the robot, it will automatically turn off.

9) **Waterproof and dustproof function:** The protection level is not less than IP67 after installing the battery pack to B2 correctly.

10) **Abnormal charging display:** The battery LED light can display relevant information about battery protection triggered by abnormal charging.

⚠ Before using the battery pack, please read and strictly abide by requirements made by Unitree Robotics in the manual, the disclaimer, the sticker on the surface of the battery pack and the surface of the special charger. The consequences of not using it as required shall be borne by the users.

.

Unitree Robotics

Battery Indicator

When the battery pack is off, the users can check the current battery by shortly pressing the battery switch once.

Be used to display the battery power during the charging and discharging process of the battery pack.
The indicator is defined as follows.

● that the LED light is constant on ☼ Indicates that the LED light is flashing ○ Indicates that the LED light is off

Battery Indicator Light				
LED1	**LED2**	**LED3**	**LED4**	**Current Battery**
●	●	●	●	87.5%-100%
●	●	●	☼	75%-87.5%
●	●	●	○	62.5%-75%
●	●	☼	○	50%-62.5%
●	●	○	○	37.5%-50%
●	☼	○	○	25%-37.5%
●	○	○	○	12.5%-25%
☼	○	○	○	0%-12.5%
○	○	○	○	=0%

Battery Turn on/ Turnoff

To turn on the battery: In the off state, short press the battery switch (button) once, and then press and hold the battery switch (button) for more than 3 seconds to turn on the battery. When the battery is turned on, the indicator light will be green and display the current battery level.

To turn off the battery: While in the powered-on state, press the battery switch (button) once, then press and hold the power switch for more than 3 seconds to turn off the battery. After the battery is turned off, all indicator lights will be extinguished.

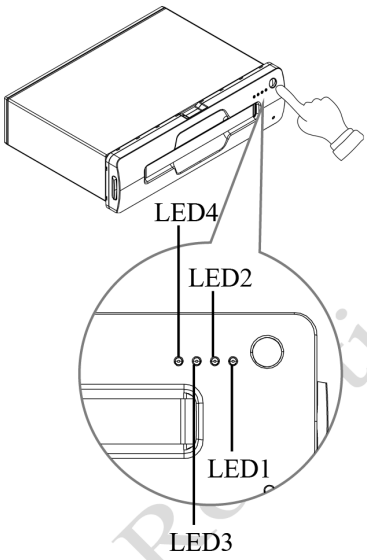

Unitree Robotics

Charger

Introduction

The plug-in charger is a charging device specifically designed for the B2 battery. It is small, lightweight, and easy to carry, providing stable power for the battery.

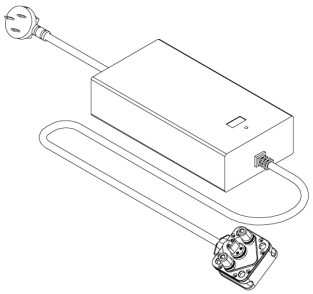

The contact charger is a charging device specifically designed for the B2, which can be combined with visual recognition, SLAM navigation, and other technologies to independently plan charging routes and it can complete charging independently, greatly improve working time and efficiency, and provide a strong guarantee for all-weather operation. The B2-Contact Charger consists of a lithium battery charger and a contact charging plate.

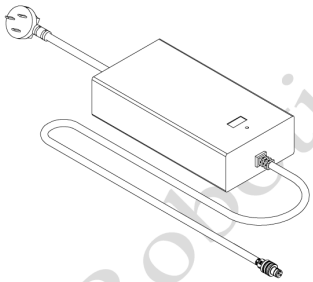

Lithium Battery Charger

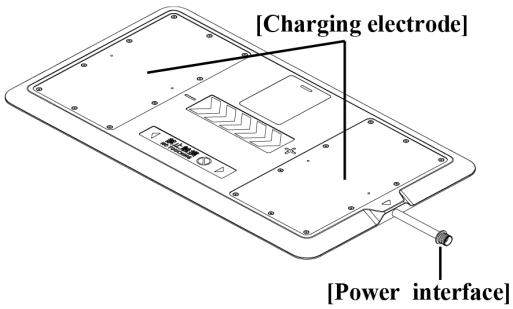

Contact Charging Board

Technical Specifications

The plug-in charger		
Parameter	**Specifications**	**Remarks**
Size	268mm*133mm*68.5mm	
Input	100-240V~50/60Hz 7.5A	
Output	58.8V, 10A, 588W	
Charging time	3h’20min	

© 2023 All rights reserved, Unitree Robotics

The Contact Charger		
Parameter	**Specifications**	**Remarks**
Model	B2	
Charging Board	684mm*390mm*19.5mm	
Input	100-240V~50/60Hz 7.5A	
Output	58.8V, 10A, 588W	
Charging time	3h’20min	
Working Temperature	5℃-40℃	Ideal Charging Temperature
Protection Level	IP67	No less than IP67
Storage Temperature	22℃-28℃	Ideal Storage Temperature
Relative Humidity	≤95%	
Atmospheric Pressure	70~106Kpa	
Cooling Method	Self-cooling + Air-cooling	

The Contact Charger Function

1) Model identification: The charging pile can identify the robot model, avoid the robot of different battery models (voltage) to incorrectly connect the charging pile, and avoid the charging pile from supplying power to the unknown model of the robot/battery/load.

2) Overcurrent protection: High current charging can severely damage the battery. When the charging current exceeds 10A, the charging station will trigger an overcurrent abnormality reminder.

3) Plate short-circuit protection: Triggered when the charging plate is short-circuited, the protection will cut off the connection between the short-circuit plate and the charger/battery, and the charging will be automatically restored after the short-circuit point is disconnected.

4) Plate jitter protection: When the charging plate is unreliable contact, the protection will cut off the connection between the charger and the battery, avoid the plate ignition phenomenon caused by contact, and the robot can automatically resume charging after getting up and lying down again.

5) Full charge circuit break protection: When the charging current < 1A, the charger is automatically disconnected from the battery.

© 2023 All rights reserved, Unitree Robotics

Battery charging

The plug-in charger

1) Connect the charger to an AC power source (100-240V, 50/60Hz). It must be ensured that the external power supply voltage matches the rated input voltage of the charger before connecting. Otherwise, the charger will be damaged (the rated input voltage of the charger is marked on the nameplate of the charger).

2) Plug in the input AC power first before charging the battery, then connect the charger to the battery.

3) Before charging the battery, ensure that the battery pack is switched off. Otherwise, the battery and charger may be damaged.

4) The users need to remove the battery pack from the robot itself when charging the battery pack.

5) In the charging state, the battery indicator of battery pack will flash at a frequency of 1Hz (1 second/time) and indicate the current battery.

6) If the battery indicator is off, the battery pack is fully charged. Please remove the battery pack and charger to finish charging.

7) The temperature of the battery pack may be high after running, t, and the battery pack must be charged after the temperature of the battery pack has dropped to room temperature.

8) Diagram for connecting the charger:

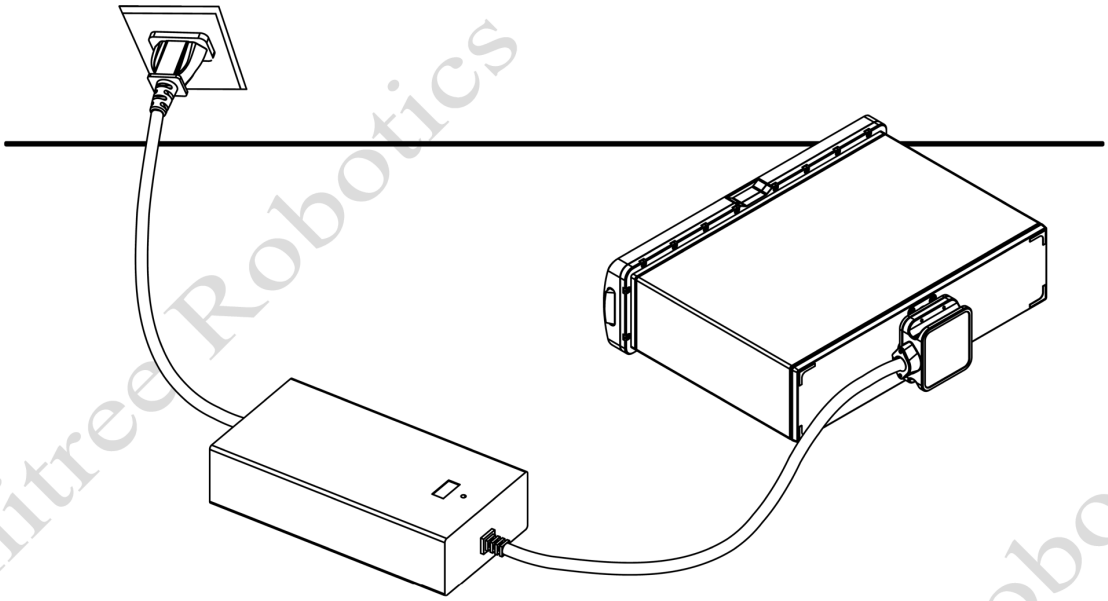

© 2023 All rights reserved, Unitree Robotics

The Contact Charger

1) Pre-charging inspection: Before each charging, please check if there are any foreign objects obstructing the charging electrodes on the bottom of the B2 body, as well as any foreign objects obstructing the charging electrode surface of the charging board. Use a dry cloth to wipe the surface of the charging electrodes to ensure good contact during the charging process.

2) Preparation before charging: Place the B2-contact charger in the open room, first connect the lithium battery charger to the input AC power supply, and then connect the contact charging board power interface, as shown in the following figure.

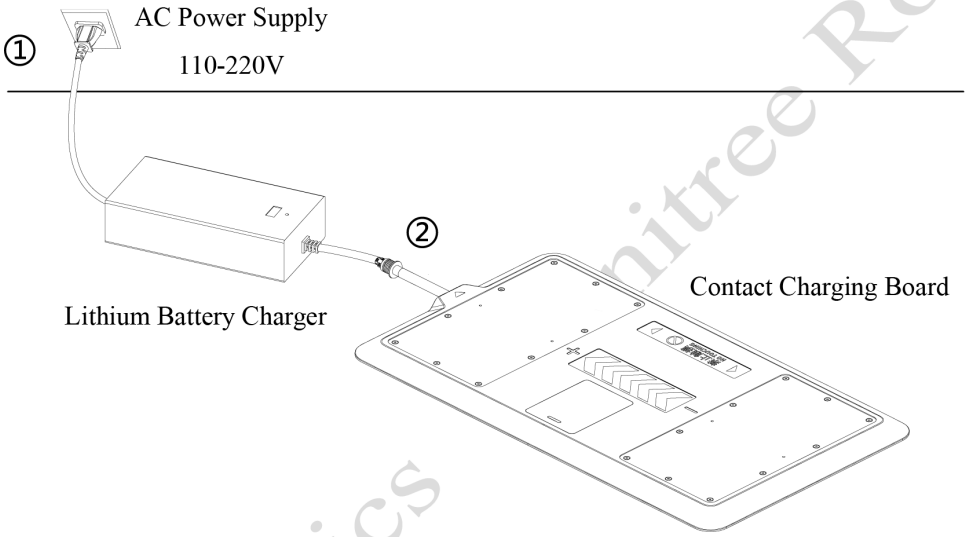

3) Charging: When using the contact charger to charge, first use the remote control to control the robot to lie down according to the direction of the charging board surface, do not recoil! so that the bottom 2 charging electrodes of the B2 robot are in contact with the charging plate 2 charging electrodes to achieve charging. When the charge is full, the charger is automatically disconnected from the battery.

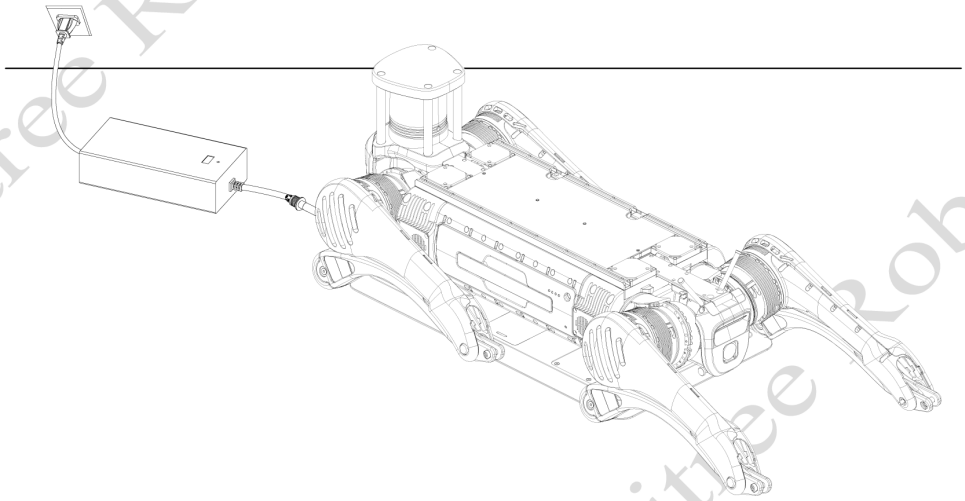

© 2023 All rights reserved, Unitree Robotics

Battery Indicator

Charging battery indicator: The battery LED light shows the current battery while charging.

Charging Indicator Light				
LED1	**LED2**	**LED3**	**LED4**	**Current Battery**
☼	○	○	○	0%-25%
☼	☼	○	○	25%-50%
☼	☼	☼	○	50%-75%
☼	☼	☼	☼	75%-100%
				Full-Charged

Charging protection indication: The battery pack LED light can display battery protection information triggered by abnormal charging.

Charging Protection Iindicator Light					
LED1	**LED2**	**LED3**	**LED4**	**Indication**	**Proction Item**
☼	○	○	○	LED1 2.5Hz flashing	Abnormal charging or discharging
○	☼	○	○	LED2 2.5Hz flashing	Excessively Low/ High Charging Temperature
○	○	☼	○	LED3 2.5Hz flashing	Excessively Low/ High Charging Voltage
○	○	○	☼	LED4 2.5Hz flashing	Overcurrent/Short Circuit
☼	☼	☼	☼	LED1-4 2.5Hz flashing	Other Malfunction

When a malfunction occurs (such as excessive current, short circuit, overvoltage or undervoltage, excessive high or low temperature), please first confirm the specific cause of the malfunction, and only after troubleshooting can you continue to use it.

- After the battery firmware update is completed, the battery level will be displayed and the system will shut down automatically.
- For safety reasons, the battery needs to be discharged during transportation. The discharge method is divided into active discharge and passive discharge.

1. Active discharge: Install the battery pack into the robot and run to a lower battery (for exam around 65%).
2. Passive discharge: Battery storage self-discharge protection, please refer to "Battery Function" for detailed description.

Unitree Robotics

Battery Safe Operation Guide

Improper use, charging or storage of battery packs may result in fire or property and personal injury. Be sure to use the battery pack in accordance with the safety instructions below.

Recommend the use

1) Make sure the battery has enough battery before each use.

2) When using, moving or charging, please be careful with the battery and charging plug to avoid being damaged by external force.

3) When the power of the battery pack is lower than two bars, stop using the robot as soon as possible, replace the battery pack with a new one or charge the battery pack.

4) It is normal for a battery that has just been used or charged to generate heat.

5) It is forbidden to contact the battery pack with any liquid. Do not immerse the battery pack in the liquid or wet it. Short circuit and decomposition reactions may occur when the inside of the battery pack meets water, which may lead to spontaneous combustion of the battery pack or even explosion.

6) It is forbidden to use battery packs not officially provided by Unitree Robotics. If the users need to replace it, please go to the official website of Unitree Robotics for relevant purchase information. Unitree Robotics is not responsible for battery pack accidents, operation failures and machine damage caused using battery packs not officially provided by Unitree Robotics.

7) It is forbidden to use battery packs with damaged packages and shells.

8) Before installing or unplugging the battery pack from the robot, please keep the power of the battery pack off. Do not plug and unplug the battery pack when the power supply of the battery pack is turned on, otherwise the power supply or the robot may be damaged.

9) The battery packs should be used at an ambient temperature of - 5℃ - 55℃. If the temperature is too high (higher than 60℃), the battery packs may catch fire or even explode. If the temperature is too low (lower than -10℃), the life span of the battery pack will be seriously damaged.

10) It is forbidden to use the battery pack in strong magnetic field or electrostatic environment. Otherwise, the battery packs protection board will fail, resulting in the failure of the battery packs and the robot.

11) It is forbidden to disassemble or puncture the battery pack in any way.

12) If the battery pack is seriously impacted by external forces, it cannot be used again until it is delivered to Unitree Robotics for official inspection.

13) If the battery pack is on fire, use solid fire extinguishers. It is recommended to use fire extinguishers in the following order: sand, fire blanket, dry powder, and carbon dioxide extinguishers.

14) Do not place the battery pack in the pressure cooker or microwave oven.

15) Do not place the battery pack on the conductor plane.

16) Do not use any conductive material (such as wire or other metal objects) to short the positive and negative terminals of the battery pack.

© 2023 All rights reserved, Unitree Robotics

17) Do not hit the battery pack. Do not place heavy objects on the battery pack or charger.

18) If there is dirt on the battery pack interface, please use a clean and dry brush, toothpick, or dry cloth to clean it. Otherwise, poor contact may be caused, resulting in energy loss or failure to charge.

Charge

1) The battery pack will automatically stop charging when fully charged. It is recommended to disconnect the charger after the battery pack is fully charged.

2) Please make sure that the battery is turned off before plugging in the charger.

3) When charging the battery, please ensure that the battery is charged within sight to prevent unpredictable accidents.

4) When charging, please pay attention to ensure that the environment around the battery has good heat dissipation, and there are no flammable and explosive items such as sundries.

5) Please keep the intelligent battery pack closed when charging.

6) The intelligent battery pack must be charged with a special charger officially provided by Unitree Robotics. Unitree Robotics will not be responsible for all the consequences caused by using a charger not officially provided by Unitree Robotics.

7) When charging, please place the battery pack and charger on the cement floor and other surrounding areas without flammable and combustible materials. Please pay attention to the charging process to prevent accidents.

8) It is forbidden to charge the battery pack immediately after the robot runs. At this time, the battery pack is in a high temperature state, and forced charging will seriously damage the life of the battery pack. It is recommended to wait for the battery pack to cool to room temperature before charging. The ideal charging ambient temperature (5℃-40℃) can greatly prolong the service life span of the battery pack.

9) After charging, please disconnect the charger from the battery pack. Regularly check and maintain the charger, and regularly check the appearance of the battery pack and other components. Never use alcohol or other combustible agents to clean the charger. Do not use a damaged charger.

Storage and transportation

1) When the battery pack is not in use, please remove the battery pack from the robot and store it out of the reach of children.

2) It is forbidden to place the battery pack near a heat source, such as a car in direct sunlight or hot weather, a fire source, or a heating furnace. The ideal storage temperature of the battery pack is 22℃-28℃.

3) During storage, please pay attention to ensure that the surrounding environment of the battery has good heat dissipation and is free of sundries and other inflammables and explosives.

4) The environment where the battery pack is stored shall be kept dry. Do not place the battery pack in water or where water may leak.

© 2023 All rights reserved, Unitree Robotics

5) It is forbidden to mechanically impact, crush or pierce the battery pack. It is forbidden to drop or artificially short circuit the battery pack.

6) It is forbidden to store or transport the battery pack together with glasses, watches, metal necklaces, hairpins, or other metal objects.

7) Do not transport damaged battery packs. Once the battery pack needs to be transported, be sure to discharge the battery pack to about 65% charge.

8) Do not store the battery pack for a long time after it is completely discharged to avoid the battery pack entering the state of over-discharge, which may cause damage to the battery cell and cannot be restored to use.

Battery Maintenance

1) Do not use the charger to charge the battery in an environment where the temperature is too high or the temperature is too low.

2) Do not store the battery in an environment where the room temperature exceeds 40 °C.

3) Do not overcharge the battery, otherwise it will cause damage to the battery core.

4) If you do not use the battery for a long time, please check the remaining battery power regularly. If the battery is lower than 30%, please charge the battery to 70% before saving. In order to avoid battery over-discharge and damage the battery.

Abandonment

Damaged batteries such as bulging, falling, water ingress and breakage shall be scrapped and shall not be used again to avoid safety risks. Be sure to completely discharge the battery before placing it in the specified battery recycling box. Batterys are hazardous chemicals, which are forbidden to be discarded in ordinary.

Precautions

1) It is strictly prohibited to use chargers not provided by Unitree for charging.

2) The contact charger temperature for the charging station is 5-40, with a relative humidity of ≤95% and atmospheric pressure of 70-106Kpa.

3) When using the contact charger for charging, do not touch the charging board electrodes after power on!!! Do not place conductive or other metal objects on the surface.

4) The charging board has positive and negative polarity. When charging, please place the head in the direction of the arrow on the surface and do not recoil!!!

5) Please ensure that the surface and interface of the contact charger are free from water droplets and there are no obstacles in the surrounding area.

6) When using, moving, or charging, please handle the charging plug with care to avoid any damage caused by external force.

7) During the charging process, please ensure that charging is done within visible range to prevent unforeseen accidents.

© 2023 All rights reserved, Unitree Robotics

8) When charging, please ensure that the area around the battery has good ventilation and is free from any flammable or explosive materials.

9) During charging, please keep the intelligent battery in the off state.

10) It is mandatory to use the dedicated charger provided by Unitree for charging. Unitree will not be responsible for any consequences caused by charging with chargers not provided by Unitree.

11) When charging, please place the contact charger and B2 on a ground surface without flammable or combustible materials, such as concrete. Pay attention to the charging process to prevent accidents.

12) It is prohibited to immediately charge the battery after the robot's operation ends. At this time, the battery is at a high temperature, and forced charging can cause serious damage to the battery life. It is recommended to wait for the battery to cool down to room temperature before charging. The ideal charging temperature range (5°C-40°C) can significantly extend the battery's lifespan.

13) Regularly inspect and maintain the contact charger, frequently checking all components such as the appearance of the charging station and battery. Do not use alcohol or other flammable substances to clean the charger. Do not use damaged chargers.

Maintenance of the charging station

1) Cleaning: When the Contact Charger is not used for a long time, please clean the surface of the charging board before use. When wiping the surface, please turn off the power first and use a dry, soft cloth to wipe the surface of the charging board and the charging electrodes on the bottom of the body, paying special attention to whether the surface is thoroughly wiped clean. Do not use metal brushes, sandpaper, etc. for cleaning to avoid scratching the surface.

2) Storage: The charger should be stored indoors in a dry and cool place, avoiding direct sunlight and rain to prevent water ingress and corrosion of components, which can shorten its service life.

3) Inspection: Conduct routine inspections before and after charging to significantly improve product reliability, reduce safety hazards, and extend the lifespan.

- Check for any deformations or bulges on the surface of the charger.
- Check for any water stains or foreign objects in the charging interface.

Unitree Robotics