B2-W Remote Control

User Manual V1.0

Unitree

This product is a civilian robot. We kindly request that all users refrain from making any dangerous modifications or using the robot in a hazardous manner.

Please visit Unitree Robotics Website for more related terms and policies, and comply with local laws and regulations.

Unitree Robotics

User Notice

Starting from December 2024, the R1 remote control has been fully upgraded to the new R3 remote control. The operation method of the new remote control remains consistent with the old version, ensuring a seamless transition and allowing you to enjoy the convenience brought by the upgrade.

Both the new and old versions of the remote control will be shipped randomly, please refer to the actual product received. Thank you for your support.

R3 Remote Control

Introduction

The R3 remote control is part of the B2-W remote control module, and the remote control handle is equipped with a digital transmission module and a Bluetooth module. The robot dog and the remote control are bound through the Unitree Explore App, and once successfully bound, they can be connected upon powering on. It can control the robot dog to achieve 3-axis posture and 3-axis position stability when standing, and can also control the robot to move forward, backward, left, right, turn in place, and walk according to certain rules (straight line, circular, linear, rectangular) on flat ground, as well as go up and down slopes/steps. The remote control handle adopts a more ergonomic design for easier grip, providing a more comfortable feel.

Parts Name

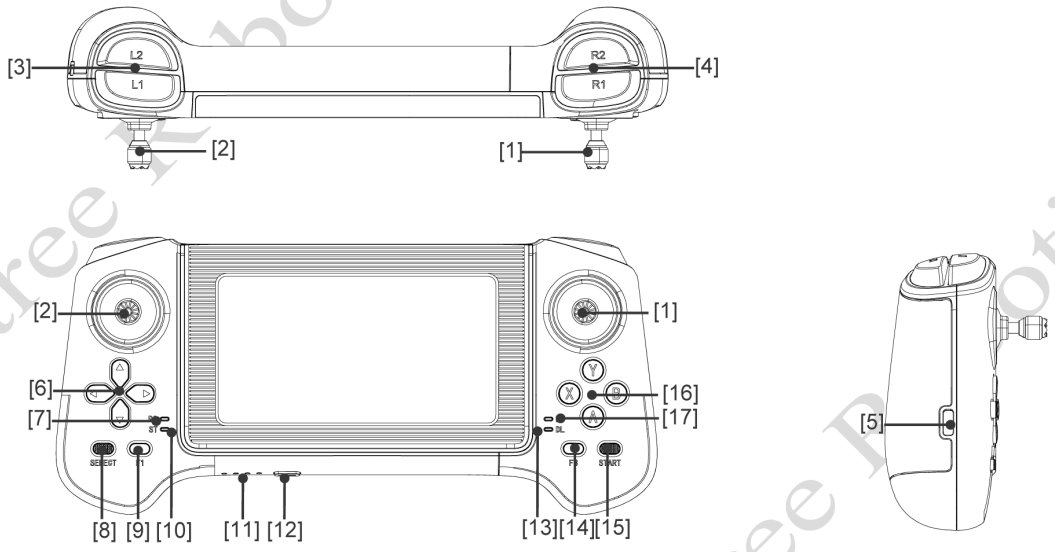

Unitree Robotics

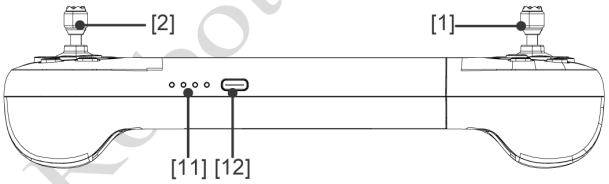

[1] Right Rocker [2] Left Rocker [3] Key L1/L2 [4] Key R1/R2 [5] Type C Charging Interface

[6] Left Key [7] Power Connect Indicator [8] SELECT [9] F1 (Function Setting Key)

[10] Charging Status Indicator [11] Power Connect Indicator [12] Power Button

[13] Data Transmission Indicator Light [14] F3 (Function Setting Key) [15] START

[16] Right Key [17] Bluetooth Signal Indicator Light

Technical Specifications

Parameter	Specification	Remarks
Charging Voltage	5.0V	
Charging Current	700mA	
Lithium Battery Capacity	780mAh	
Communication Mode	Data Transmission Module, Bluetooth	
Running Time	5h	
Remote Control Distance	Above 100m	Open Environment

Install the joystick

Step 1: Take out the joystick. As shown in the picture, use your right hand to pull out the remote control smoothly and slowly, and remove the two joysticks from the storage slot.

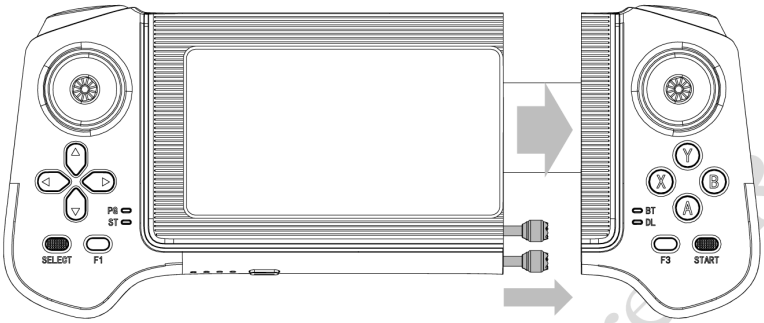

© 2025 All rights reserved, Unitree Robotics

Step 2: Install the joystick. As shown in the figure, secure the remote control to the remote control in a clockwise direction and tighten it.

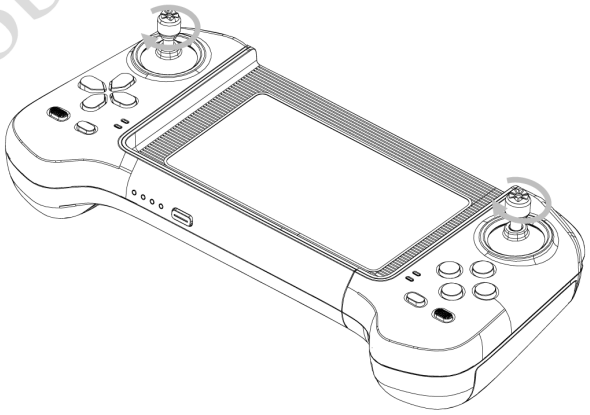

● If you need to store it, please remove the remote control and place it in the storage slot.

Remote Control Handle Rocker Calibration

Hold the remote control without touching the rocker, press the upper buttons F1 and F3 on the remote control and release them at the same time. At this time, the remote control will emit a continuous "beep~beep~" sound (1 time/sec) to indicate that it has entered the calibration mode. After entering the calibration mode, the users need to turn the left and right rockers to full rudder and rotate several times until the sound of "beep~beep~" stops, and the calibration is ready. Press F3 once to make the calibration take effect and complete the calibration.

● Attention! When calibrating the remote rod, please do not touch the rocker before calibration. The rocker can only be moved after entering the calibration mode.

Remote Control Turn on/Turnoff

Turn on the remote control: Shortly press the power button once, then long press the power button for more than 2 seconds, and hear two "beeps", which means the remote control is turned on.

Turn off the remote control: Shortly press the power button once, then long press the power button for more than 2 seconds, and hear three "beeps", which means the remote control is turned off.

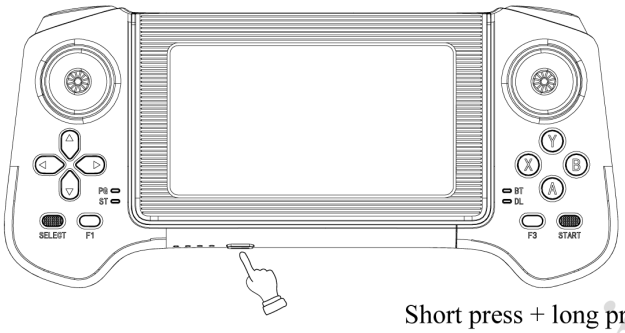

Short press + long press for 2 seconds or more

© 2025 All rights reserved, Unitree Robotics

Vibration/Sound Toggle

Switching vibration: Quickly press the F3 button 3 times to switch to vibration mode.

Switch sound: Quickly press the F3 button 3 times to switch to sound mode.

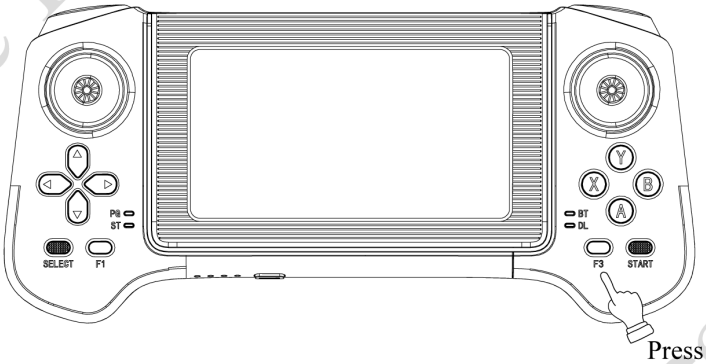

Press F3 button 3 times quickly

Vibration/Sound Switch

Turn off vibration/sound: Quickly press the F1 button 3 times to turn off vibration/sound.

Turn on vibration/sound: Quickly press the F1 button 3 times to turn on vibration/sound.

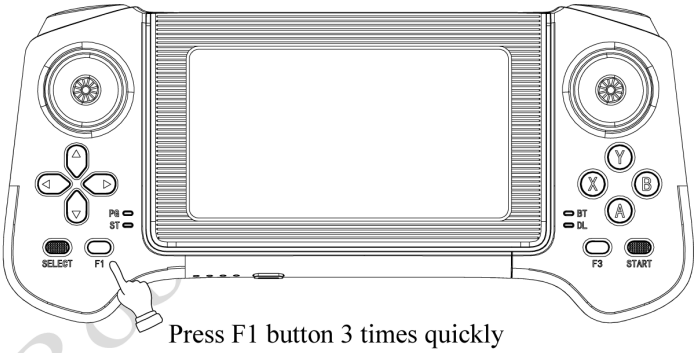

Press F1 button 3 times quickly

● After modifying the remote control feedback function, it is not saved by default. If you want the changes to take effect the next time you turn on the remote control, hold down the F1 button during shutdown to save the current mode.

Unitree Robotics

Remote Control Charging

When the remote control battery indicator shows low power, the remote control should be connected to the charger, as shown in the figure below:

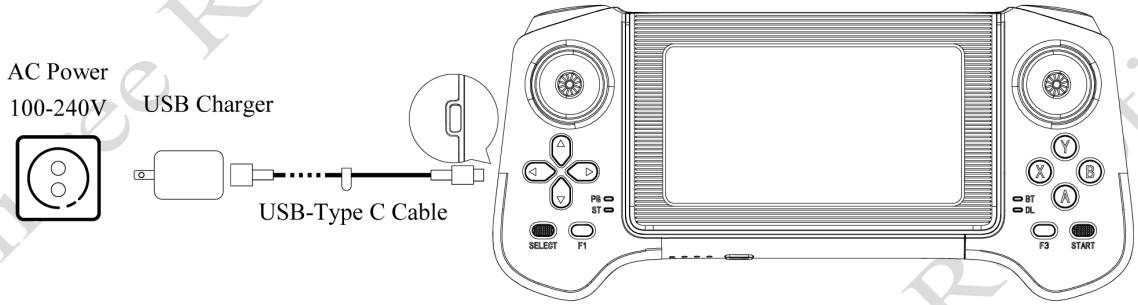

a) We recommend you to use a 5V/2A USB charger which meets FCC/CE standard.

b) Ensure that remote control is switched off before charging it.

c) The power indicator light will flash at 1Hz (1 second/time) in charging status and indicate the current power level.

d) When the power indicator light is all on it means the battery pack is full, please remove the charger to finish charging.

Charging Indicator Light				
LED1	**LED2**	**LED3**	**LED4**	**Current Battery**
☀	○	○	○	0%-25%
☀	☀	○	○	25%-50%
☀	☀	☀	○	50%-75%
☀	☀	☀	☀	75%-100%
☀	☀	☀	☀	Full Charged

R3 Remote Control Basic Operation

For the first time to use remote control, you need to bind it on Unitree Explore App, [Settings] -> [Remote Control Settings] - turn on the remote control switch, enter the corresponding remote control code, and then you can bind it with the digital transmission module on the robot dog.

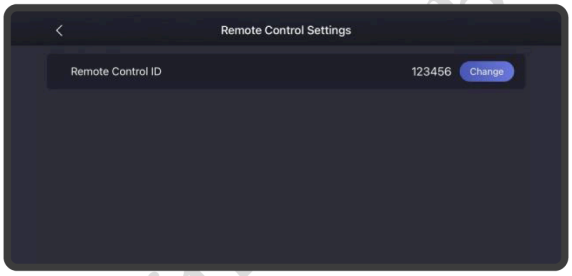

Unitree Robotics

After the remote control is turned on and successfully connected to B2-W, the right DL indicator light will turn on, indicating that the remote control is connected to the B2-W data transmission module. At this point, you can control B2-W using the remote control. When using the remote control to maneuver B2-W with the joysticks, the control methods are as follows:

Left rocker

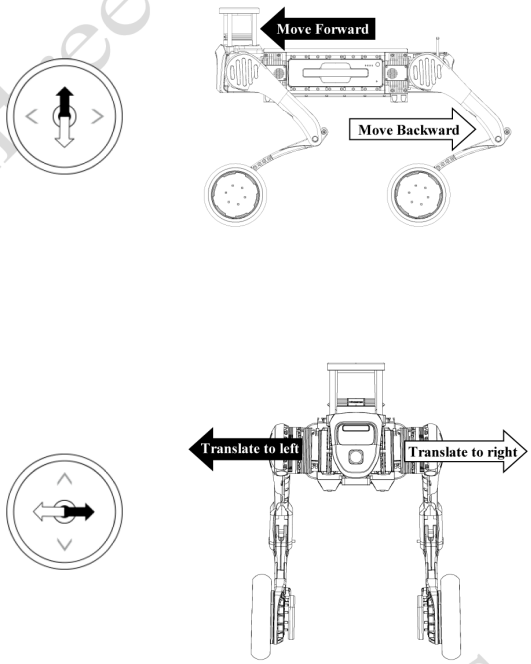

Right rocker

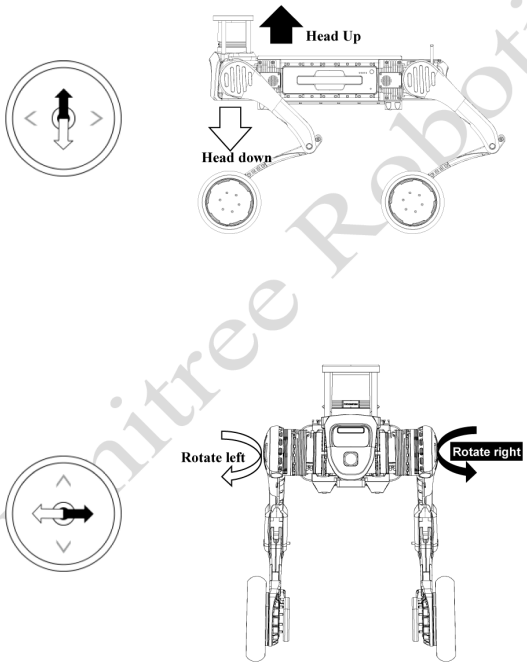

- Rocker back to center/neutral position: The rocker of the handle is in the middle position.
- Rocker amount: The deviation of the remote control rocker from the center of the rocker.
- Walls, doors, and other obstacles greatly weaken the signal between the robot and the remote control module. Please be sure to operate the robot in an open space.

Unitree Robotics

Robot dog reference diagram:

	Side View	Top View	Front View
Robot	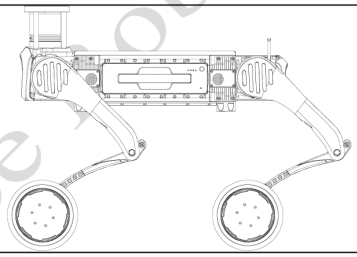	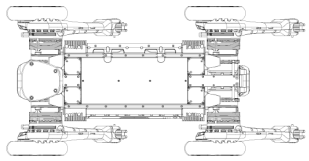	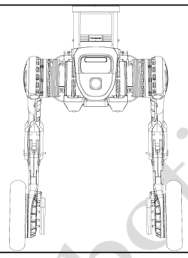
Diagram	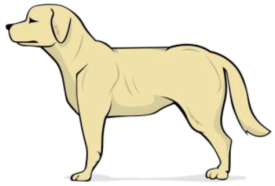	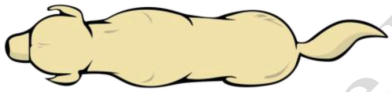	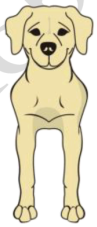

Remote Control Instructions:

Button	Effect
Left Rocker	Front, Back, Left and Right
Right Rocker	Rotate Left and Right
Posture Switch	
SELECT	Make a Pose
L2 (Long Press) + A (Click)	Lock Standing/ Lying Down
L2 (Long Press) + B (Click)	Damping Mode
L2 (Long Press) + X (Click)	Recover Standing
L2 (Long Press) + R2 (Long Press) + X (Click)	Action: Rotating Jumping (special configuration)
Mode Switch	
Y	General Mode
L2 (Long Press) + R2 (Long Press) + START (Click)	Special Mode
Function	
F3 (Pressed 3 times)	Sound/Vibration Toggle
F1 (Pressed 3 times)	Sound/Vibration Switch

⚠ ● Stand-up recovery safety instructions: The stand-up recovery function requires space for flipping over. There should be no people or objects within a 3-meter radius around the robot dog to avoid unnecessary personal

© 2025 All rights reserved, Unitree Robotics

injury and property damage. Otherwise, Unitree Robotics will not be liable for any resulting losses or consequences.

● For the forward jump function, please access the Unitree Explore App to trigger it. The forward jump function is considered a dangerous action. When activated, ensure that there are no obstacles within a semicircle with a 4-meter diameter in front of B2-W (especially no people). If non-standard operations cause personal injury.

● If the R3 remote control is not connected to the robot dog or phone after turning on, it will automatically shut down within 10 minutes if there is no operation. If you need to connect and use it, please turn it on again.

Unitree Robotics

R1 Remote Control

Introduction

The remote control is part of the B2-W remote control module, and the remote control handle is equipped with a digital transmission module and a Bluetooth module. The robot and the remote control are bound through the Unitree Explore App, and once successfully bound, they can be connected upon powering on. It can control the robot to achieve 3-axis posture and 3-axis position stability when standing, and can also control the robot to move forward, backward, left, right, turn in place, and walk according to certain rules (straight line, circular, linear, rectangular) on flat ground, as well as go up and down slopes/steps. The remote control handle adopts a more ergonomic design for easier grip, providing a more comfortable feel.

Parts Name

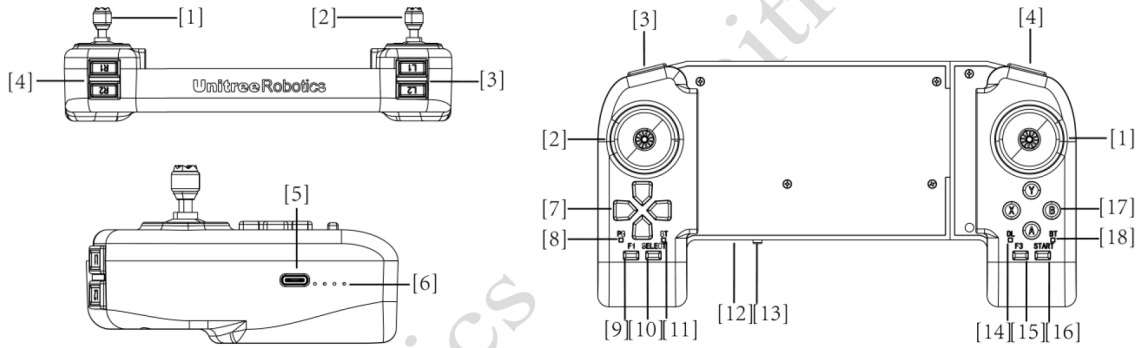

[1] Right Rocker [2] Left Rocker [3] Key L1/L2 [4] Key R1/R2 [5] Type C Charging Interface

[6] Data Transmission Signal Light [7] Left Key [8]Power Connect Indicator

[9]F1 Left Rocker Calibration Key [10]SELECT [11]Charging Status Indicator [12]Power Indicator Light

[13] Power Button [14] Data Transmission Indicator Light [15] F3 Right Rocker Calibration Key

[16] START [17] Right Key [18] Bluetooth Signal Indicator Light

Technical Specifications

Parameter	Specification	Remarks
Charging Voltage	5.0V	
Charging Current	2A	
Lithium Battery Capacity	2500mAh	
Communication Mode	Data Transmission Module, Bluetooth	
Running Time	4.5h	
Remote Control Distance	Above 100m	Open Environment

© 2025 All rights reserved, Unitree Robotics

Remote Control Handle Rocker Calibration

Hold the remote control without touching the rocker, press the upper buttons F1 and F3 on the remote control and release them at the same time. At this time, the remote control will emit a continuous "beep~beep~" sound (1 time/sec) to indicate that it has entered the calibration mode. After entering the calibration mode, the users need to turn the left and right rockers to full rudder and rotate several times until the sound of "beep~beep~" stops, and the calibration is ready. Press F3 once to make the calibration take effect and complete the calibration.

Attention! When calibrating the remote rod, please do not touch the rocker before calibration. The rocker can only be moved after entering the calibration mode.

Remote Control Turn on/Turnoff

Turn on the handheld remote control: Shortly press the power button once, then long press the power button for more than 2 seconds, and hear a "beep", which means the remote control is turned on.

Turn off the handheld remote control: Shortly press the power button once, then long press the power button for more than 2 seconds, and hear three "beeps", which means the remote control is turned off.

Remote Control Charging

When the handheld remote control battery indicator shows low power, the handheld remote control should be connected to the charger, as shown in the figure below:

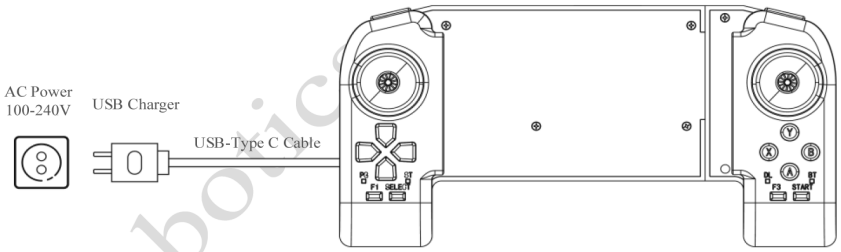

e) We recommend you to use a 5V/2A USB charger which meets FCC/CE standard.

f) Ensure that handheld remote control is switched off before charging it.

g) The power indicator light will flash at 1Hz (1 second/time) in charging status and indicate the current power level.

h) When the power indicator light is all off it means the battery pack is full, please remove the charger to finish charging.

Charging Indicator Light				
LED1	**LED2**	**LED3**	**LED4**	**Current Battery**
☀	○	○	○	0%-25%
☀	☀	○	○	25%-50%
☀	☀	☀	○	50%-75%
☀	☀	☀	☀	75%-100%
○	○	○	○	Full Charged

© 2025 All rights reserved, Unitree Robotics

R1 Remote Control Basic Operation

To use the remote control for the first time, you need to bind the remote control in the Unitree Explore App. Go to **[**Settings**]**, turn on the remote control switch, enter the corresponding remote control code, and then the remote control can be bound to the digital transmission module on the robot dog.

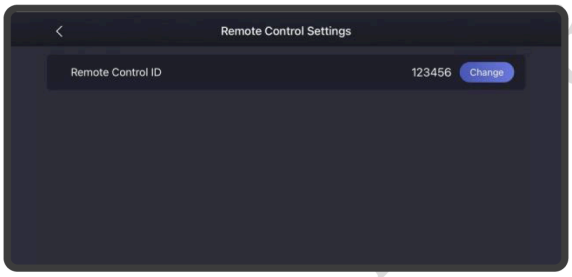

Once the remote control is powered on and successfully connected to B2-W, the data transmission light on the left side will be fully illuminated. This indicates that the remote control is connected to the B2-W digital transmission module, and you can now control B2-W with the remote control. When using the remote control to maneuver B2-W with the joysticks, the control methods are as follows:

Left rocker

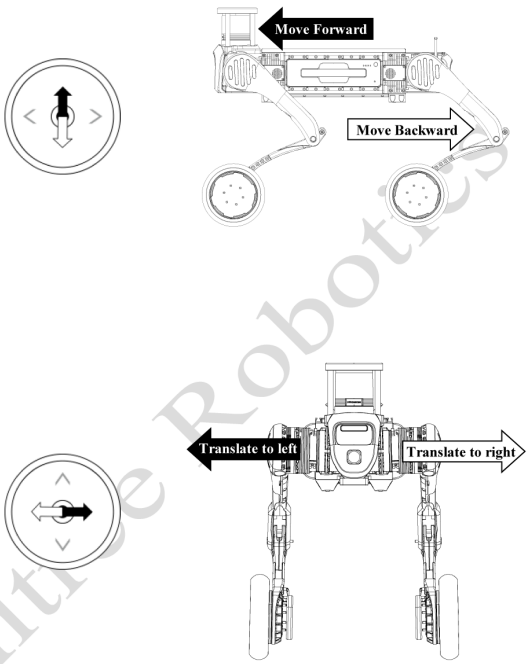

Right rocker

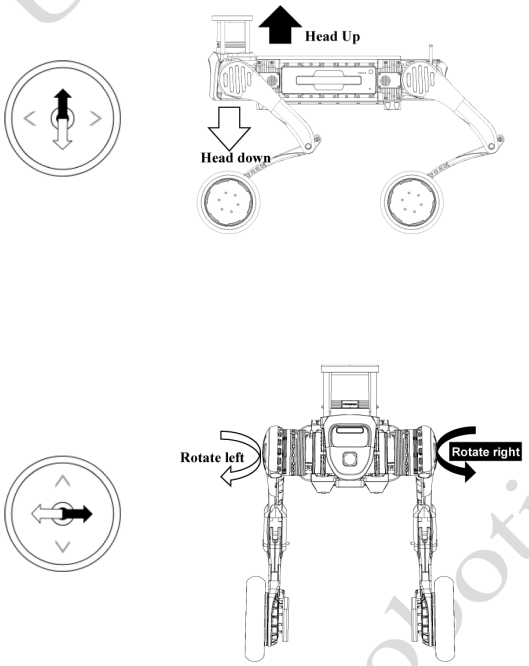

- Rocker back to center/neutral position: The rocker of the handle is in the middle position.
- Rocker amount: The deviation of the remote control rocker from the center of the rocker.
- Walls, doors, and other obstacles greatly weaken the signal between the robot and the remote control module. Please be sure to operate the robot in an open space.

© 2025 All rights reserved, Unitree Robotics

Robot dog reference diagram:

	Side View	Top View	Front View
Robot	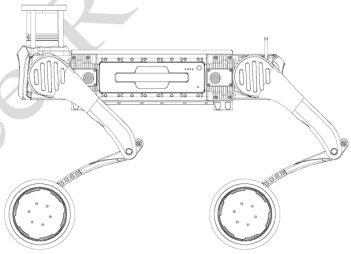	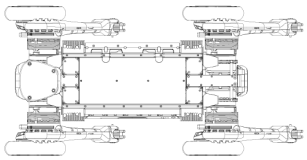	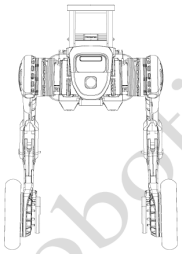
Diagram	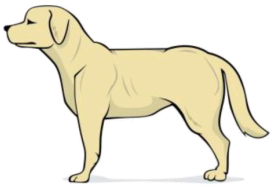	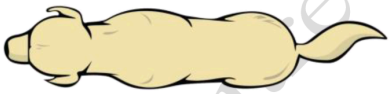	

Remote control command:

Button	Effect
Left Rocker	Front, Back, Left and Right
Right Rocker	Rotate Left and Right
Posture Switch	
SELECT	Make a Pose
L2 (Long Press) + A (Click)	Lock Standing/ Lying Down
L2 (Long Press) + B (Click)	Damping Mode
L2 (Long Press) + X (Click)	Recover Standing
L2 (Long Press) + R2 (Long Press) + X (Click)	Action: Rotating Jumping (special configuration)
Mode Switch	
Y	General Mode
L2 (Long Press) + R2 (Long Press) + START (Click)	Special Mode

Unitree Robotics

© 2025 All rights reserved, Unitree Robotics

- Stand-up recovery safety instructions: The stand-up recovery function requires space for flipping over. There should be no people or objects within a 3-meter radius around the robot dog to avoid unnecessary personal injury and property damage. Otherwise, Unitree Robotics will not be liable for any resulting losses or consequences.
- For the forward jump function, please access the Unitree Explore App to trigger it. The forward jump function is considered a dangerous action. When activated, ensure that there are no obstacles within a semicircle with a 4-meter diameter in front of B2-W (especially no people). If non-standard operations cause personal injury.

Revision History

Version	Date	Modification Content
1.0	April 18, 2025	Initial Version

Unitree Robotics