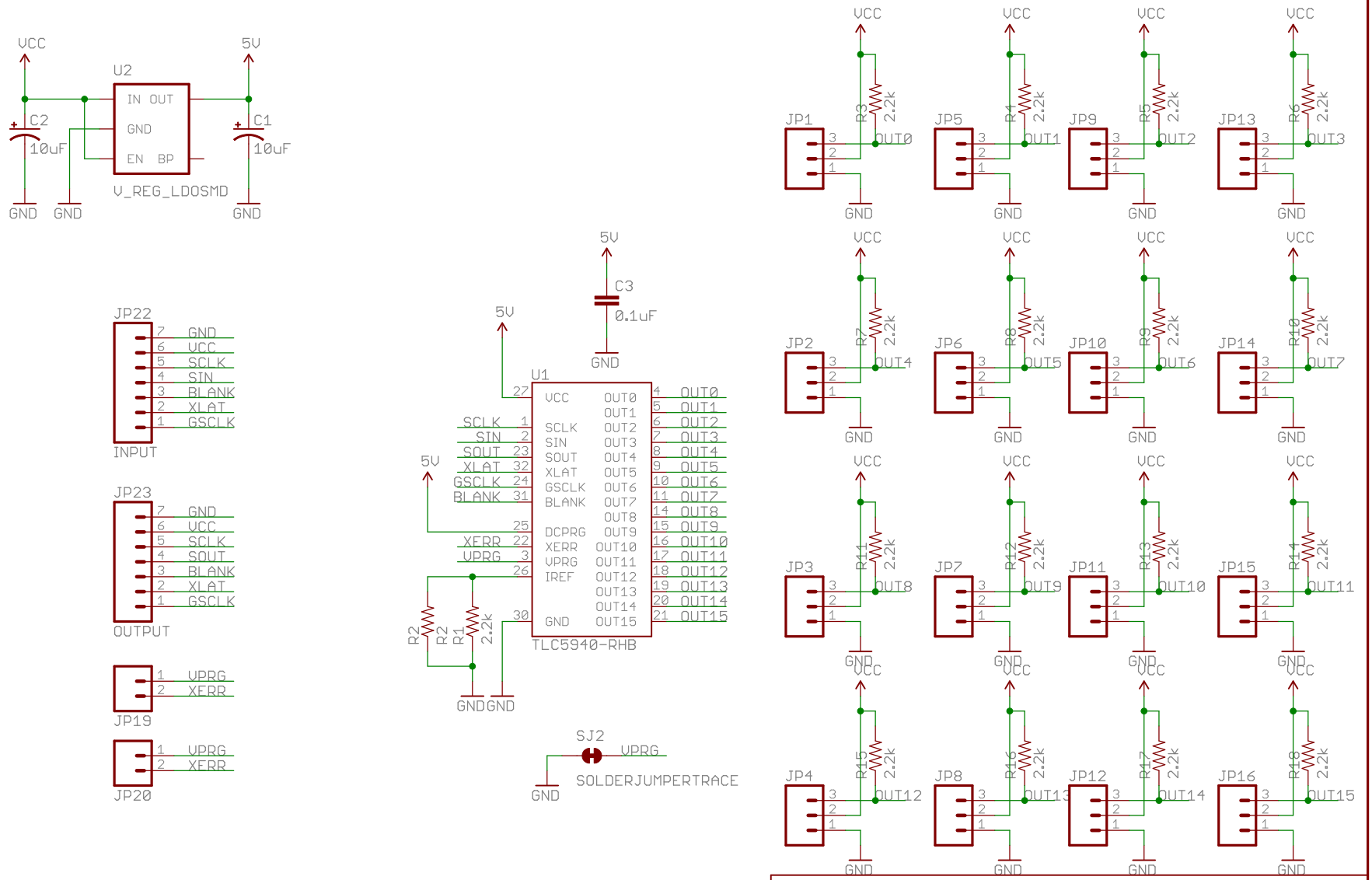

Released under the Creative Commons Attribution Share-Alike 3.0 License
http://creativecommons.org/licenses/by-sa/3.0
Design by: Jim Lindblom

TITLE: TLC5940-Breakout-v12	SFE	SFE	SFE
Document Number:		REV:	
Date: not saved!		Sheet: 1/1	