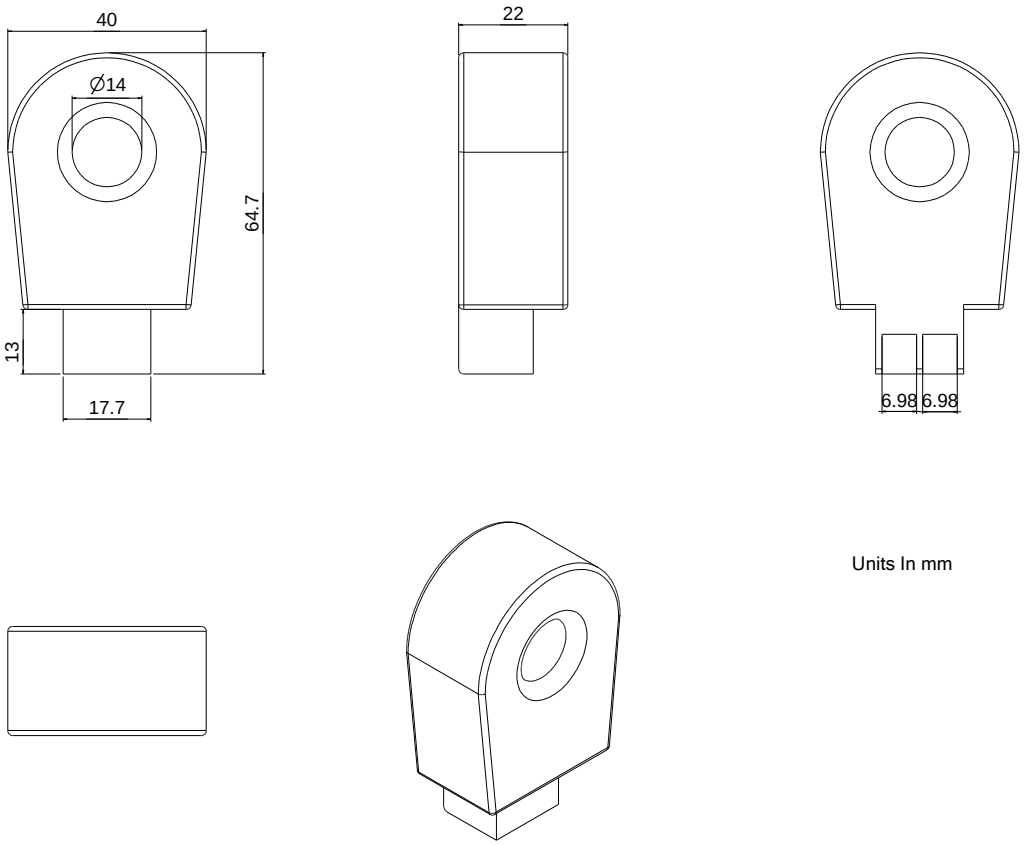

Units In mm