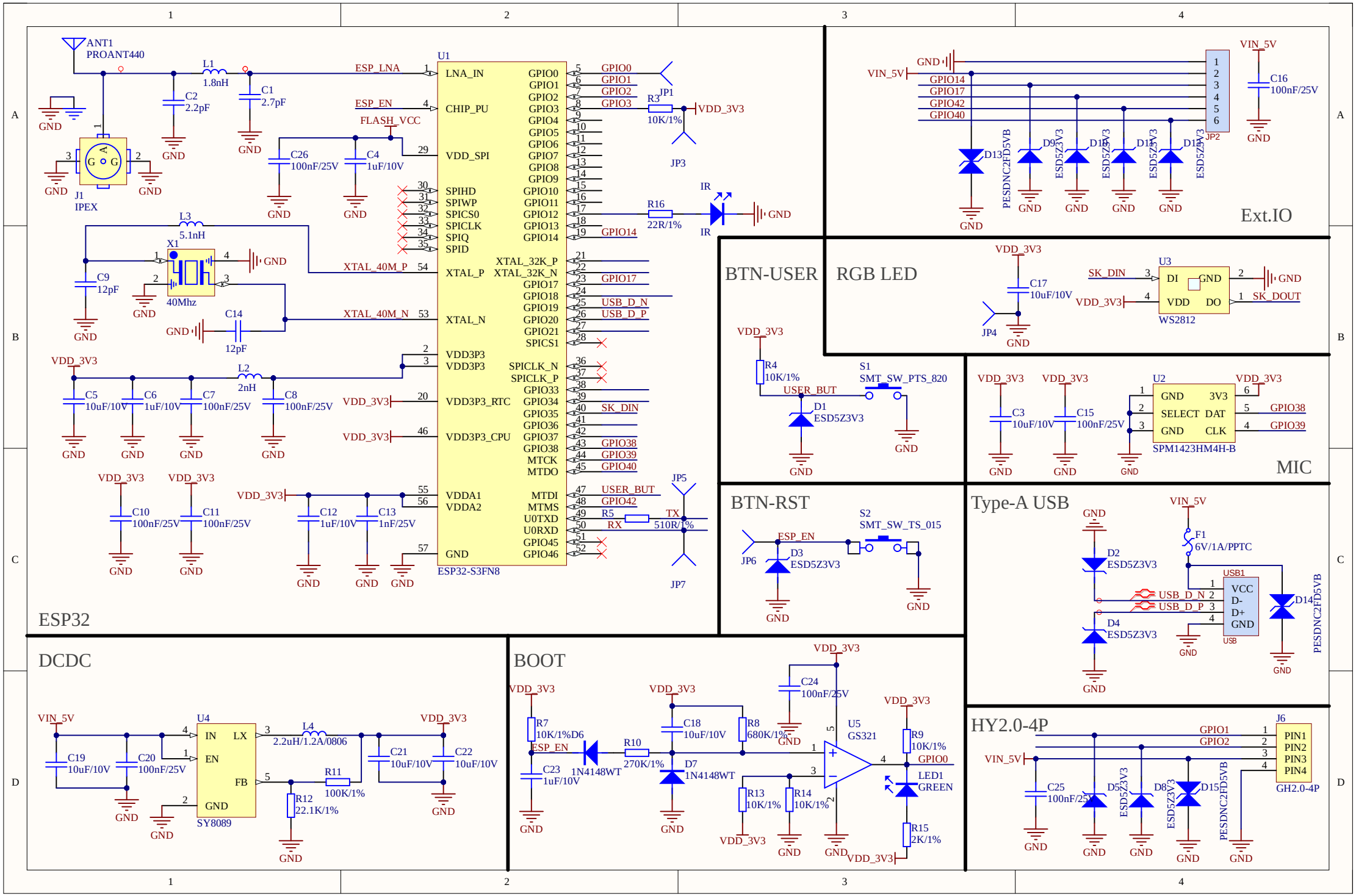
ESP32
ANT1
PROANT440
L1
1.8nH
C1
2.7pF
C2
2.2pF
J1
IPEX
U1
ESP32-S3FN8
LNA_IN
CHIP_PU
VDD_SPI
SPIHD
SPIWP
SPICS0
SPICLK
SPIQ
SPID
XTAL_P
XTAL_N
VDD3P3
VDD3P3_RTC
VDD3P3_CPU
VDDA1
VDDA2
GND
XTAL_32K_P
XTAL_32K_N
SPICLK_N
SPICLK_P
MTCK
MTDO
MTDI
MTMS
U0TXD
U0RXD
ESP_LNA
ESP_EN
FLASH_VCC
XTAL_40M_P
XTAL_40M_N
VDD_3V3
USB_D_N
USB_D_P
SK_DIN
USER_BUT
TX
RX
R3
10K/1%
JP1
JP3
R16
22R/1%
IR
R5
510R/1%
JP5
JP7
X1
40Mhz
C9
12pF
C14
12pF
L3
5.1nH
L2
2nH
C26
100nF/25V
C4
1uF/10V
C5
10uF/10V
C6
1uF/10V
C7
100nF/25V
C8
100nF/25V
C10
100nF/25V
C11
100nF/25V
C12
1uF/10V
C13
1nF/25V
Ext.IO
VIN_5V
GPIO14
GPIO17
GPIO42
GPIO40
JP2
C16
100nF/25V
D13
PESDNC2FD5VB
D9
D12
ESD5Z3V3
RGB LED
C17
10uF/10V
JP4
U3
WS2812
SK_DIN
SK_DOUT
BTN-USER
R4
10K/1%
S1
SMT_SW_PTS_820
D1
ESD5Z3V3
MIC
U2
SPM1423HM4H-B
C3
10uF/10V
C15
100nF/25V
GPIO38
GPIO39
BTN-RST
S2
SMT_SW_TS_015
JP6
D3
ESD5Z3V3
Type-A USB
F1
6V/1A/PPTC
USB1
D2
ESD5Z3V3
D4
ESD5Z3V3
D14
PESDNC2FD5VB
USB_D_N
USB_D_P
DCDC
U4
SY8089
IN
LX
EN
FB
L4
2.2uH/1.2A/0806
C19
10uF/10V
C20
100nF/25V
C21
10uF/10V
C22
10uF/10V
R11
100K/1%
R12
22.1K/1%
BOOT
R7
10K/1%
D6
1N4148WT
R10
270K/1%
C23
1uF/10V
C18
10uF/10V
D7
1N4148WT
R8
680K/1%
C24
100nF/25V
U5
GS321
R9
10K/1%
LED1
GREEN
R13
10K/1%
R14
10K/1%
R15
2K/1%
HY2.0-4P
J6
GH2.0-4P
PIN1
PIN2
PIN3
PIN4
C25
100nF/25V
D5
D8
D15