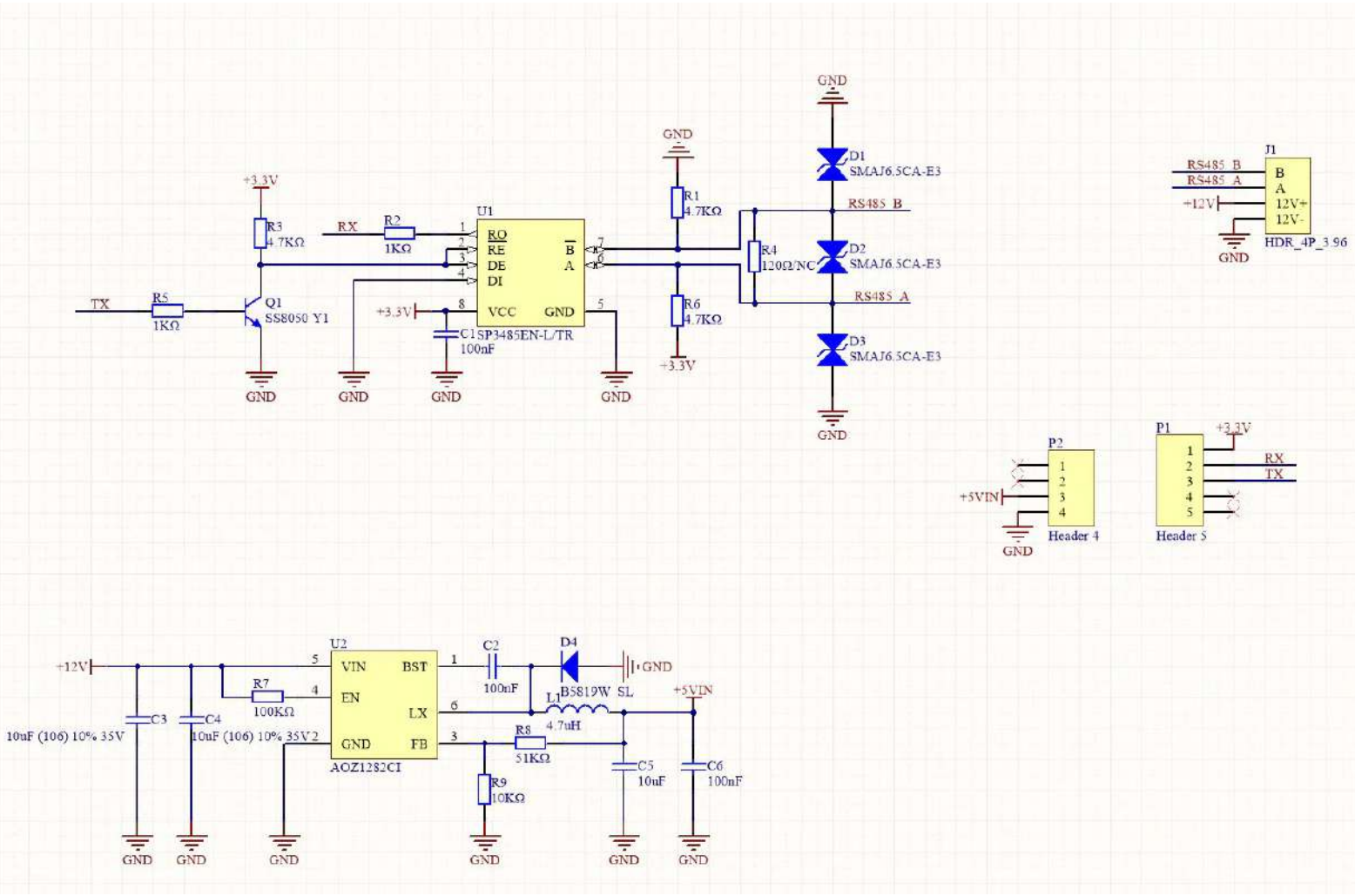
GND
D1
SMAJ6.5CA-E3
RS485_B
D2
SMAJ6.5CA-E3
RS485_A
D3
SMAJ6.5CA-E3
GND
R1
4.7KΩ
R4
120Ω/NC
R6
4.7KΩ
+3.3V
U1
RO
RE
DE
DI
VCC
GND
B
A
SP3485EN-L/TR
C1
100nF
+3.3V
R3
4.7KΩ
RX
R2
1KΩ
TX
R5
1KΩ
Q1
SS8050 Y1
GND
GND
GND
GND
J1
RS485_B
RS485_A
+12V
B
A
12V+
12V-
HDR_4P_3.96
GND
P2
+5VIN
Header 4
GND
P1
+3.3V
RX
TX
Header 5
+12V
U2
VIN
EN
GND
BST
LX
FB
AOZ1282CI
C2
100nF
D4
BS819W SL
GND
L1
4.7uH
+5VIN
R7
100KΩ
C3
10uF (106) 10% 35V
C4
10uF (106) 10% 35V2
R8
51KΩ
R9
10KΩ
C5
10uF
C6
100nF
GND
GND
GND
GND
GND
GND