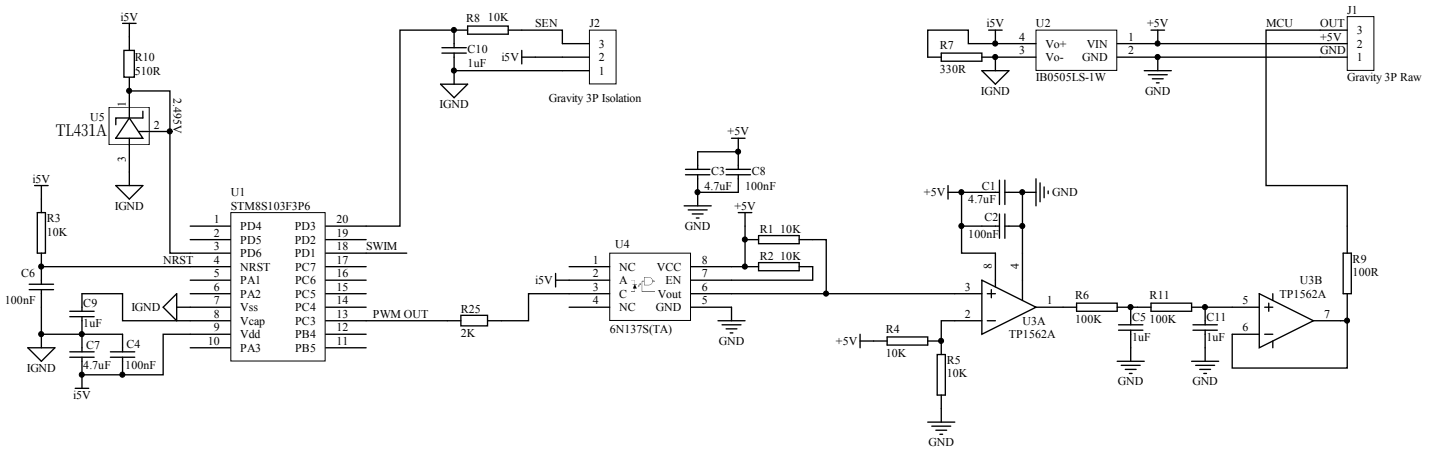

Title: *Gravity: Analog Isolation Module*		SKU: DFR0504	
Drawn: lg.gang-CD	Revision: V1.0	Size: A3	
Page: 1 of 1	Date: 2017/6/16	Time: 17:08:40	